GENERIC CHP SYSTEM 553 kW Peak Capacity

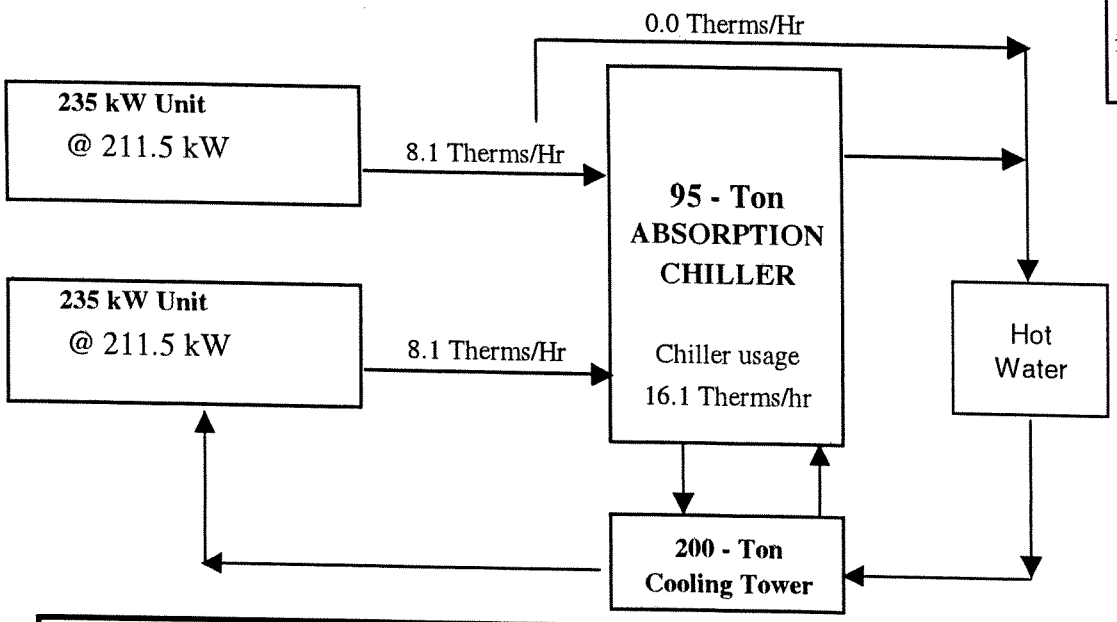

Two UIF sized units were configured into a conventional skid as an example of a proposed utility CHP system

1,789,290 Design heat output for both units
90% Actual unit dispatch load
1,610,361 Btu/hr for CHP system

1,611,600 Heat into 95-ton Absorption Chiller
-0.01 Remaining heat output for hot water
Using 0.90 kW/ton

Capacity and Heat Rate Data:

Load Point	Gen Unit kW	Absorp. Chiller kW	Cooling Tower kW	Net Output kW	HHV Fuel Input Mbtu/Hr	Gen Unit Only Heat Rate Btu/kWh	CHP System Heat Rate Btu/kWh
Normal Load	423.0	85.3	-2.7	**505.6**	3.72	8,794	**7,358**

EXHIBIT F
PAGE 1 OF 1