BLUWATER TECHNOLOGY

genesis

TRUBLUE

SODIUM BROMIDE

ACTIVE INGREDIENT: Sodium Bromide 99%
OTHER INGREDIENTS: 1%
TOTAL 100%

KEEP OUT OF REACH OF CHILDREN

CAUTION

SEE BACK PANELS FOR ADDITIONAL PRECAUTIONARY STATEMENTS AND FIRST AID.

NET CONTENTS: 2 lbs.

Department of Agriculture
STATE OF HAWAII
LICENSED
PERIOD 2015-2017 LIC. NO. 7035.1

FIRST AID	
IF IN EYES	Hold eye open and rinse slowly and gently with water for 15-20 minutes. Remove contact lenses, if present, after the first 5 minutes, then continue rinsing eye. Call a poison control center or doctor for treatment advice.
IF INHALED	Move person to fresh air. If person is not breathing, call 911 or an ambulance, then give artificial respiration, preferable by mouth-to-mouth, if possible. Call a poison control center or doctor for further treatment advice.
IF ON SKIN OR CLOTHING	Take off contaminated clothing. Rinse skin immediately with plenty of water for 15-20 minutes. Call a poison control center or doctor for treatment advice.
IF SWALLOWED	Call a poison control center, or doctor immediately for treatment advice. Have person sip a glass of water if able to swallow. Do not induce vomiting unless told to do so by the poison control center or doctor. Do not give anything by mouth to an unconscious person.
Have the product container or label with you when calling a poison control center or doctor, or going for treatment. **YOU MAY ALSO CONTACT 1-800-420-9236 FOR EMERGENCY MEDICAL TREATMENT INFORMATION.**	
NOTE TO PHYSICIAN: Probable mucosal damage may contraindicate the use of gastric lavage.	

PRECAUTIONARY STATEMENTS

HAZARDS TO HUMANS AND DOMESTIC ANIMALS

CAUTION

Harmful if swallowed. Harmful if absorbed through the skin. Avoid breathing dust. Avoid contact with eyes, skin, or clothing. Wash thoroughly with soap and water after handling. Remove contaminated clothing and wash before re-use.

ENVIRONMENTAL HAZARDS: This product is toxic to fish and aquatic organisms. Do not contaminate water by cleaning of equipment or disposal of waste.

CHEMICAL AND PHYSICAL HAZARDS: Will decompose above 1472°F (800°C), releasing toxic gases. Avoid communition and dusting. Avoid contact with strong oxidizers (other than sodium hypochlorite and chlorine), acids, alkaloidal and heavy metal salts.

DIRECTIONS FOR USE

It is a violation of Federal Law to use this product in a manner inconsistent with its labeling.

FOR INDOOR OR OUTDOOR COVERED SPAS ONLY
(Not for use in swimming pools)

This product is designed to be used in conjunction with Genesis, a water sanitization system for spas that uses Blu Water Bromine Generator Technology, an electrolysis unit that converts bromide into hypobromite solution. The produced hypobromite solution (bromine) is then introduced into the spa to be treated as a sanitizer for spa water.

INITIAL DOSAGE: Upon initial filling of spa with fresh water, add 1.2 pounds of this product per 100 gallons of spa water to a spa equipped with a Genesis water sanitization system (with Blu Water Bromine Generator Technology). This will establish sufficient bromide reserve for the bromine generator to operate properly.

MAINTENANCE: A Genesis water sanitization system (with Blu Water Bromine Generator Technology) will operate to produce available bromine as designed until the bromide reserve goes below required levels. This product should be added if the bromide level drops below the initial charge. Dilution, splash out and leaks are primary reasons for the bromide level to drop. If the bromine generator does not produce enough available bromine, make sure the recommended level of 1440 ppm as sodium bromide is still present in the spa water. The level can be tested with a Total Dissolved Solids test (TDS meter), a salt test or by taking a water sample to a spa/pool store. If this product is being added repeatedly the spa should be checked for leaks. Before entering the spa the bromine level should be tested. The available bromine level should be maintained between 3-5 ppm as active residual bromine level and can be tested with a suitable test kit found at any spa/pool store. If the bromine level is above 8 ppm then turn the spa off until the level drops below 5 ppm. The bromine generator only produces bromine when the spa is circulating. For more immediate results, dilution with fresh water will lower the bromine level. Outdoor spas should be covered when not in use. Spa water has a tendency to foam and cloud that is directly proportional to the amount of use it receives. This is due to the accumulation of body fats and oils and contaminants too small for the filtration equipment. To a great extent, defoamer, clarifier, shock treatments, and demineralizers or sequestering agents can be used to clear the water. When this becomes impossible, draining, cleaning, and refilling the spa will be the most satisfactory way of solving this problem.

For problems beyond those listed above, consult your Genesis product manual or call your Blu Water dealer.

STORAGE AND DISPOSAL

Do not contaminate water, food, or feed by storage or disposal.

PESTICIDE STORAGE: Store in a cool, dry, well-ventilated area, in well-closed original containers.

PESTICIDE DISPOSAL: Do not contaminate water, feed or food by storage or disposal. Waste resulting from the use of this product may be disposed of on site or at an approved waste disposal facility.

CONTAINER HANDLING: Non-refillable container. Do not reuse or refill this container. If empty: Place in trash or offer for recycling available. If partly filled: Call your local solid waste agency for disposal instructions. Never place unused product down any indoor or outdoor drain.

WARRANTY: Seller warrants that this product conforms to its chemical description and is reasonably fit for the purposes stated on the label when used in accordance with label directions under normal conditions of use, but to the exten consistent with applicable law, neither this warranty nor any other warranty of MERCHANTABILITY OR FITNESS FOR A PARTICULAR PURPOSE, expressed or implied, extends to the use of this product contrary to label instructions, or under abnormal conditions, or under conditions not reasonably foreseeable to Seller, and Buyer assumes the risk of any such use.

EPA Reg. No.: 69470-36-90052
EPA Est. No.: 69470-WV-2

Manufactured for:
Hot Tub Solutions
d/b/a Blu Water Technology
20 CR 632
Dayton, TX 77347

REV0315 #600212 12002048

6 60174 10866 9

USER MANUAL

Automated bromine generator for spas, hot tubs and swim spas

ISIS

Standard and Top-Side

BLU WATER TECHNOLOGY

1. WARNINGS 3
2. ISIS SYSTEM COMPONENTS 4
3. INSTALLATION INSTRUCTIONS 5
4. HOW DOES MY ISIS WORK 6
5. START-UP/OPERATING INSTRUCTIONS 7
6. ISIS MAINTENANCE AND OPERATION 8
7. HOW AND WHEN TO ADD SODIUM BROMIDE 10
8. UNDERSTANDING YOUR ISIS CONTROLLER 11
9. CHECKING FOR CONDUCTIVITY 12
10. QUICK REFERENCE DOS AND DON'TS 12
11. APPENDIX I: GLOSSARY 13
12. APPENDIX II: SPA WATER MANAGEMENT 14
13. QUICK TROUBLESHOOTING YOUR BROMINE 14
14. PHOSPHATE TEST 16

Never use chlorine in your spa; use only non-chlorine shock!

Never use CYA or cyanuric acid in your spa!

Never enter a spa when bromine is NOT present!

Children should always be supervised around your spa!

Always cover your spa when not in use!

WARNINGS:

When using this electrical equipment, basic safety precautions should always be followed, including the following:

- **BEFORE CONNECTING *"ISIS"* READ AND FOLLOW ALL INSTRUCTIONS**
- *ISIS* must be connected to a circuit protected by a ground fault circuit interrupter (GFCI) in the US. In Canada, the appliance must be connected through a residual current device (RCD) that has a rated residual operating current not exceeding 30 mA.
- A terminal marked Earth/Ground, or the ⏚ is located inside the supply terminal box or compartment.
- To reduce the risk of electric shock, this terminal must be connected to the grounding means provided in the electric supply service panel with a continuous copper wire equivalent in size to the circuit conductors supplying this equipment.
- *Live* parts, except parts supplied for low-voltage (not exceeding 12 volts), must be inaccessible to a person in the spa.
- Earth/Ground appliances must be permanently connected to fixed wiring.
- Parts incorporating electrical components, except remote control devices, must be located or fixed so that they cannot fall into the bath.
- *ISIS* shall be attached with screws. Make sure that the screws do not contact internal circuitry. Make sure that the screws do not allow the ingress of liquid.
- If the supply cord is damaged, it must be replaced by the manufacturer, its service agent, or similarly qualified persons in order to avoid a hazard.
- In the US, ISIS must only be used with Sodium Bromide registered with the EPA. In Canada, the Sodium Bromide must be scheduled or registered under the Pest Control Product Act.
- Always clean and/or replace your filter at least once every month.
- Your *ISIS* unit should be installed after the heater in the circulation pump line.
- WARNING – To reduce the risk of injury, do not permit children to use this product unless they are closely supervised at all times.

ISIS system components

Unit Features:

Logix Controller with adjustable bromine output (12 settings plus “BOOST”)

Automatic polarity reversal (every 2 minutes)

Patent pending Graphitic Electrode Cell

Automatic voltage detection of 110 to 240 volts AC (50-60 Cycles)

Power Consumption: ISIS = 20 Watts, 34 VA Maximum

2 Year Electronic Warranty

2 Year Cell Replacement Warranty

WARRANTY is VOID if Electrode is installed horizontally!!!

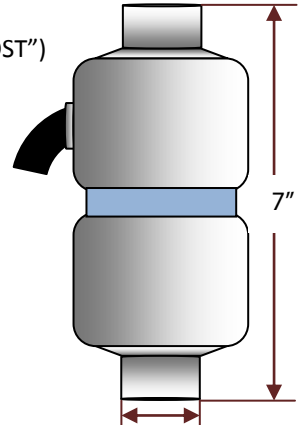

ISIS Bromine Generator - Complete System Includes:

1 -Electronic controller "NEMA 4X/IP65 enclosure, 12 different power settings plus “BOOST”, duty cycle control to 97% Efficiency, 110 to 240 volts AC input line voltage, automatic polarity reversal ensures effective electrode cell operation".

1 – Bromine generating electrode cell

1 – Tru-Blu Sodium Bromide Test Strips (Test strips test for NaBr ONLY- NOT for testing Bromine)

2 – 1” to ¾” barbed elbows

1 – Phosphates Test Kit

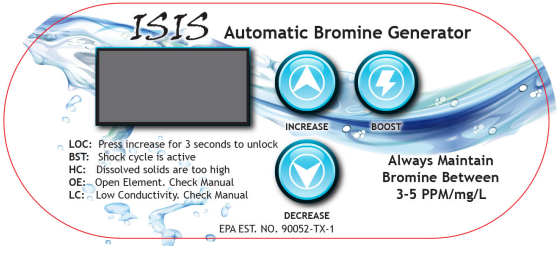

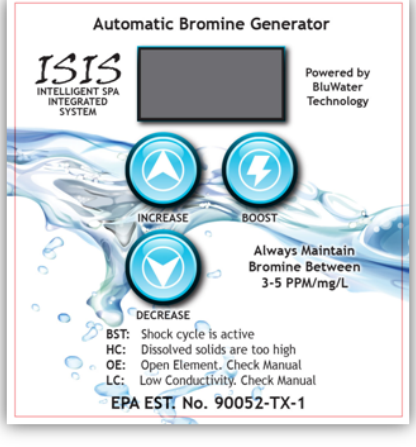

INSTALLATION INSTRUCTIONS

CAUTION: READ THE INSTRUCTION MANUAL

NEVER Horizontal

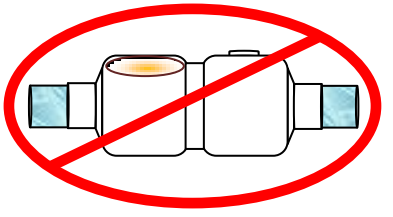

ALWAYS Vertical

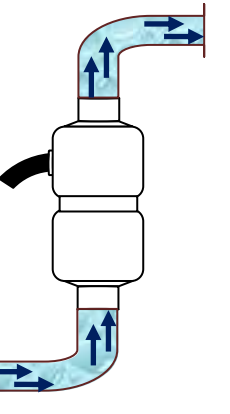

Electrode must be installed VERTICALLY!

WARNING: DISCONNECT THE ELECTRIC POWER BEFORE SERVICING - USE ONLY COPPER CONDUCTORS

ELECTRICAL: The ISIS Unit must be wired to the circulation side of the pump cycle to ensure operation takes place ONLY during low-speed circulation.

PLUMBING: Use a jet-line from a manifold that operates during low-speed circulation. Electrode should be installed as the last component before water re-enters the spa. DO NOT use a jet-line that can be shut off as this can result in electrode failure if the jet is shut-off while ISIS is in use.

1. Control box must be installed vertically and **MUST NEVER** be laid flat on its back. This may cause water damage not covered by your warranty!
2. Loosen the four screws at the four corners of the case cover (top).
3. Insert the flexible type SW, SWT, SJ, or SJT copper power wiring through the liquid tight compression connector on the case. Refer to the wiring diagram inset. The opposite end of the power wiring should be connected to the spa power supply and the connection must include a GFCI. If the spa is not connected to a GFCI, one must be provided.
4. Tighten the nut on the liquid tight compression connector until a good seal is made against the outside insulation of the wire.
5. Strip the insulation back on the white, black, and Green wires 3/8 inch.
6. Insert the Green wire into one of the Earth/Ground ⏚ terminals.
7. Insert the White and Black wires in the Line Voltage terminals (L1, L2) The polarity of the Line Voltage terminals is not significant.
8. Replace the case cover. Make sure that the cover screws are sufficiently tight to prevent liquid infiltration.

How does my ISIS Unit Work?

The ISIS Automatic Bromine Generator device is the easiest and most cost-effective way to keep your spa sparkling clean and always inviting. ISIS uses naturally occurring bromide salt in your spa's water and through a low voltage current, converts it into pure bromine; this process is called electrolysis. Bromine remains present in your water as long as you are managing your water effectively. By eliminating any chemical by-products, the wasteful spa draining and refilling cycles are dramatically reduced – ultimately saving thousands of gallons of water annually and virtually eliminating chemical additives.

The Isis system produces 100% pure bromine that does not contain calcium, binders, chlorine and fillers that are in all brominating tablets and powders. This dramatically increases water quality and clarity plus allows you to go up to a year between drain and refill time depending on usage. Additionally, pure bromine swiftly eliminates the presence of organic materials left behind by spa bathers such as oils, sweat, and skin cells.

Start-up/operating instructions

The results of using ISIS in your spa are immediate and stunning. When free of contaminants, your spa's water will be clear, soft, and amazingly brilliant. BluWater Technology devotes all of its efforts to eliminating dry skin, pungent chemical smells, and the unsightliness of tablet feeders. What will happen when you use BluWater Technology in your spa? ...no more hassle, just sparkling clean water!

BEFORE STARTING

Be certain you start with a clean spa. It should be free of contaminants and other residues that can accumulate on the sides and/or around the jets. It is also important to only use spa cleaning products that have *no phosphates* or phosphonic acids since phosphates will deplete free bromine and are super-food for algae. Always start your spa with a clean filter before filling with water.

If the water source is "well water" or a non-municipal water source, you should have your water tested for Total Dissolved Solids (TDS) and metals. Water with high TDS is likely to have higher metal content and will need a metal remover to decrease the metals and help ensure a successful start. This test can be done by your local spa dealer. The ideal range for your start-up TDS is between 50 and 200 PPM - mg/L. If TDS from your source water is above 500 PPM, a metal remover is strongly recommended.

1. Using your PURE FILL Spa Pre-Filter, fill your spa with water to the recommended level and *DO NOT FILL WITH WATER FROM A "WATER SOFTENER".*
2. Before starting the ISIS system, balance your water chemistry to ensure a successful start up. Ideal ranges are as follows:

   pH (7.2-7.6)
   Total Alkalinity (80-120)
   Calcium Hardness (150-250 PPM)
   Phosphates (0 - 30 PPB)

   Use the phosphate test kit included with your ISIS System. Bromine residuals will be significantly reduced if phosphate levels are high. If phosphates are detected, purchase a phosphate remover and follow the directions accordingly. **Any** phosphates in your spa will reduce bromine levels.
3. Determine the level of "NaBr" (Sodium Bromide) required for your spa size. NaBr should be added at a rate of 1.2lbs per 100 gallons or approximately 1440 PPM. Note: For Swim Spas or Spas greater than 1000 gallons add at a rate of 2lbs per 100 gallons or approximately 2000 PPM.

   Example: For a 500 gallon spa add approximately 6lbs of NaBr. **1.2 lbs x (5) 500 gallons = 6lbs NaBr.**

4. Turn jets on high speed, broadcast/sprinkle the NaBr across the surface of the water to help evenly distribute the NaBr into the spa and let circulate for 30 minutes.
5. Test the Sodium Bromide concentration with the Tru-Blu NaBr test kit. If you have added the correct amount of NaBr, you should have a reading between 1300-1500PPM.
6. Adjust the filtration time to circulate a minimum of 8 hours every 24 hours on a 2 speed pump.
7. For an average spa between 300-500 gallons we recommend starting at a power setting of "6" with the "boost" feature depressed. This will accelerate the production of the bromine level for the first 8 hours.
8. Always keep your bromine level between 3-5 PPM. The spa size, filtration, and bather demand will determine what maintenance setting is required. Test your bromine level after 24 hours and adjust the power setting up or down depending on the bromine levels that are indicated. Adjusting more than 1 setting at a time will have a significant impact on the daily bromine output.

ISIS Maintenance and Operation

WATER CHEMISTRY

Spa owners should purchase bromine/ pH/ Total Alkalinity (3 in 1) test strips from a spa dealer and test spa's water regularly to ensure that **pH, Alkalinity and Bromine levels are in the proper range.** Never enter a spa that has cloudy water or insufficient bromine levels. Your spa dealer has a variety of chemicals to increase or decrease your pH value and Total Alkalinity. If you are unsure how to use these chemicals after reading the products directions, consult your dealer for assistance.

FINDING THE RIGHT POWER SETTING FOR ISIS is really quite simple.

For the first few days of operation monitor your Bromine Level. The ideal level for bromine in spas is between 3-5 PPM. Should your bromine elevate above 5 PPM, reduce power setting daily until the desired bromine level is achieved. Adjusting more than 1 setting at a time will have a significant impact on the daily bromine output.

HOW MANY HOURS A DAY SHOULD MY LOW SPEED PUMP BE CIRCULATING?

Circulation time is a very important element for clean and inviting water. **Eight (8) hours is the minimum circulation time needed** for ISIS to create the proper amount of bromine for your spa. Your system should only be powered up and producing Bromine when your spa is circulating. It is recommended to use a 24-hour circulation pump for spas over 1,000 US Gallons.

CLEANING THE SPAS FILTERS

FILTER MAINTENANCE: Filters should be cleaned monthly in ALL Spas. Remove the spa filter(s) from your spa and immerse in a 5 gallon bucket of clean water. Then add a filter cleaner with NO PHOSPHATES and NO PHOSPHONIC ACIDS to the water. Follow the instructions on your filter cleaner product. It is recommended to keep a second filter or set of filters that can be rotated out during the cleaning process. It is important to let filters dry naturally which extends the life of the filter.

IMPORTANT POINTS TO REMEMBER

- The appropriate setting for your ISIS unit will depend on how often you use your spa. A spa with a higher-than-average bather load will require a higher setting on the ISIS unit. This simply means that the ISIS needs to produce more bromine to maintain the level between 3 and 5 PPM/mg/L."
- It is important for all spa users to shower before entering the spa to minimize contaminates: phosphates, deodorants, sprays, oil, skin flakes, hair, etc.
- For the occasional heavy bather load press the "BOOST" key instead of adjusting the setting.
- Sodium Bromide does not evaporate or deplete from usage. NaBr levels will reduce from your spa because of water carry out and splash out. If bromine production becomes a question, test for Sodium Bromide level to ensure the NaBr levels are adequate.
- With the ISIS System, draining and cleaning the spa is recommended at least once per year. Follow the start up instructions.
- For SAFETY reasons it is very IMPORTANT to test the bromine level before spa use. Testing after using the spa will give you a lower bromine reading. The ISIS goes back to work over the next 24 hours of circulation and brings the bromine level back to normal.
- <u>NON-USE of Spa:</u> If the spa will not be in use for an extended period of time, lower the ISIS power setting to ½ the normal maintenance setting to prevent elevated bromine levels.
- The ISIS unit only creates bromine when the circulation pump is "ON".
- The ISIS controller should only display LED readout during low-speed circulation. When the display is visible, bromine is being produced.
- Only use a Non-Chlorine Shock when shocking the spa, and **NEVER USE CHLORINE OF ANY KIND IN A SPA OR HOT TUB.**
- If phosphates are present do not drain your spa and start over, as phosphates may still be present. Add a phosphate remover and let the spa circulate for 24 hours. **Remove the phosphates by thoroughly cleaning the filter.**
- Clean the filter thoroughly every 30 days.

How and when to add NaBr Sodium Bromide:

UNITED STATES: ISIS uses a 98% pure, granular version of SODIUM BROMIDE.

It should be **added at a rate of 1.2 pounds per 100 gallons of spa water** at start up. Be careful not to overdose the spa at start up. **For Swim Spas** or Spas greater than 1,000 gallons, add at a rate of 2 pounds per 100 gallons.

CANADA: only a liquid version of Sodium Bromide is available as a 35% solution. Adding 1.2 litre of the liquid TRU BLU per 100 gallons / 380 litres will increase your Sodium Bromide level by approximately 1440 PPM or 1440 mg/L. This is important to know as it will be necessary from time to time in refreshing the Sodium Bromide content to proper levels, thus insuring adequate bromine production. Test the Tru Blu levels monthly or when bromine production drops significantly.

NOTE: Sodium Brominde does NOT evaporate or deteriorate. It remains stable in solution in spa water. The bromine production is a perpetual cycle in relationship to your NaBr.

TESTING YOUR WATER FOR NABR SODIUM BROMIDE

In order to ensure that the Sodium Bromide level in the spa is at the correct level, use the Sodium Bromide test kit (provided). See illustration below:

This test is not instant and will take a few moments... The ideal Sodium Bromide level is 1300-1500 PPM/mg/L. In Swim Spas or Spas greater than 1,000 gallons, we recommend 1900-2100 PPM/mg/L.

SODIUM BROMIDE IS NOT BROMINE; IT IS SIMPLY BROMIDE SALT!

YOU CAN NOT TEST FOR BROMINE WITH A TRU BLU TEST KIT.

Use a BROMINE TEST KIT to test bromine levels in your spa!

Intelligent Controller Codes for ISIS Automated Bromine Generator

LC (Low Conductivity) will appear when the unit detects that the conductivity is below the minimum level. At start-up, you will experience this if you have not added the Sodium Bromide. Check the Sodium Bromide level in the water and add the appropriate amount per your spa. If the NaBr level is correct, the cell may be experiencing scaling. In this case, you will want to clean the cell. Please consult with your spa dealer for further information. (See pg. 12)

bSt (Boost) will appear when the BOOST feature is on. Depressing this key once will increase the bromine production to twice that of the last bromine production setting for the next *accumulated eight hours of pump circulation time.* The BOOST cycle should be depressed after heavy bather load or usage.

OE (Open Element) will appear if the ISIS controller is unable to detect a connection to the electrode cell. You may see this if the electrode is not connected properly, there is inadequate water flow, or the cell is not functioning due to unknown circumstances. This may require that the cell be evaluated and possibly cleaned or replaced. If this happens, please consult with your spa dealer.

HC (High Current) will appear when the TDS (Total Dissolved Solids) is too high resulting in High Current at the electrode cell. If this reading appears at or near start up of your system, check your source water for TDS and proper NaBr readings. If this reading appears after an extended period of operation, draining 25% of the water and refilling can help reduce TDS levels. If "HC" remains present, consult with your spa dealer for a comprehensive water analysis and recommended course of action.

LOC (Locked) Your ISIS Top Side controller includes a “LOC” feature which ensures that the system is “Locked” when not being utilized to manage your Spa’s water. Your system will automatically produce bromine when necessary. This feature is simply for your protection. In order to “Unlock” your ISIS, simply depress the “increase” key on your unit for 3 seconds.

Checking for "Conductivity" on your ISIS Unit

The ISIS system has an integrated feature which allows you to test the conductivity at the electrode from your controller. If you're not getting a Bromine reading in your spa, this can be helpful in determining the cause. To do this, hold down the "increase" and "decrease" buttons together for 3 seconds. If your conductivity reading falls to within 0.6 – 1.5, you have good conductivity at the electrode and are producing bromine. If you're in this range and cannot get a bromine reading, check your water for phosphates or consult your local pool or spa professional. If your conductivity is low, check the salt level in your spa to confirm that you have the correct sodium bromide level: 1300-1500 PPM, Swim Spa: 1900-2100 PPM

Cleaning the Electrode Cell

On occasion, it may become necessary to clean the electrode cell. In order to clean the electrode cell, lower your pH to 6.0 using pH down from your local pool and spa dealer. After doing this, dose the spa with scale remover following the instructions on the bottle. This may need to be done more than once to ensure effective cleansing. Consult BluWater Technology if there are any questions about this process. Make CERTAIN to adjust pH back to normal range after completing this process. If electrode is not sufficiently cleaned, remove the electrode from the spa and clean more thoroughly. Contact BluWater Technology for instructions to complete this process.

Quick Reference Dos and Don'ts

Dos

- Water chemistry is critical to the performance of your spa and will ensure your best possible spa experience.
- Monitor your bromine levels at spa start-up and until you reach your maintenance level. Always pay close attention to your water chemistry including Bromine levels.
- Clean the filter every 30 days!
- Fill your spa with a carbon-based pre-filter, Pure Fill.
- Shower before entering your spa in order to reduce contaminants such as soaps, perfumes, phosphates, skin cells, etc. This is very important for spa cleanliness.

Don'ts

- Don't ever use Sodium Chloride or ordinary table salt in your spa; only 98-99% Sodium Bromide.
- Don't ever use chlorine in your spa. Use only *non-chlorine* shock.
- Don't ever fill your spa from a water softner.
- Don't ever think your spa is maintenance-free.
- Don't forget to read your new ISIS manual, not just the quick reference.

Appendix I: Glossary

Bather Load- *The number of people using the spa combined with how long it is being used and the frequency of use.*

Bromine- *Destroys waterborne bacteria, algae in water and swiftly eliminates the presence of organic matter left behind by spa users (e.g. oils, sweat, skin cells).*

(CH) Calcium Hardness- *Describes the concetration of calcium in your water.*

(NaBr) 98%- *Sodium Bromide salt.*

Organic Matter- Substances that are left behind when using your spa. This includes such things as oils, dead skin cells, sweat, etc. that serve as fuel for bacteria.

pH- It plays an important role in how effective sanitizing chemicals function. It helps with water clarity and ensures that minerals in solution (like calcium) do not precipitate and scale the surface of your spa.

PPB- *Parts Per Billion = mg per Litre.*

PPM- *Parts Per Million = mg per Litre.*

(TA) Total Alkalinity*- The measure of the ability of a solution such as water to neutralize acids to the equivalence point of carbonate or bicarbonate.*

(TDS) Total Dissolved Solids- *Various inorganic matter present in your water.*

Appendix II: Spa Water Management Spreadsheet

When you first install your Spa, it is very important to understand your water chemistry. Use this tool to track your water. Your spa dealer can test your water and provide the information. You can also conduct your own tests using proper testing equipment.

	Week 1	Week 2	Week 3	Week 4	Week 5	Week 6	Week 7	Week 8	90 Days
pH:									
Total Alkalinity:									
Phosphates:									
Calcium Hardness:									

	Week 1	Week 2	Week 3	Week 4	Week 5	Week 6	Week 7	Week 8	90 Days
pH:									
Total Alkalinity:									
Phosphates:									
Calcium Hardness:									

Quick Troubleshooting your Bromine level

- How many hours is the spa circulating? (Minimum of 8 hours)
- What is the power setting on the controller?
- What is the NaBr level? (1300-1500); (Swim Spas 1900-2100)
- How many gallons of water does the spa hold?
- Check Conductivity at the electrode (0.6 - 1.5)
- Check for contamination! (Phosphates must be 0.00 PPB)
- Water source? ("Well" or "City" water?)
- Maintaining proper water chemistry? (pH, alkalinity, calcium hardness)
- Last filter cleaning? (Always make sure you are maintaining a clean filter.)
- How long has the system been in use? (If 3-5 years, electrode may need replaced!)

WARRANTY INFORMATION CARD

BEFORE SUBMITTING ANY CLAIM, CONTACT YOUR SPA DEALER WITH QUESTIONS IN ORDER TO ENSURE YOU HAVE COMPLETED APPROPRIATE TROUBLESHOOTING STEPS FOR YOUR ISIS UNIT.

ISIS Dealer where purchased: **Contact:** **Telephone:**

Date of purchase: **Spa Brand:** **ISIS install:** **Pre-Installed** **After Market**

Start up Water Chemistry:

pH: _____

Total Alkalinity: _____

TDS: _____

Calcium Hardness: _____

Metals: _____

Phosphates: _____

Were you provided bromine test strips? **Yes** **No**

Were you provided Tru Blu test strips? **Yes** **No**

Did you fill your spa with municipal or well water? **Well** **City**

Comments:

Questions? Contact you Dealer.
You may also contact Tech support at 1 855-447-8772 or visit us online at www.bluwatertechnology.com
For all warranty issues, concerns, or claims, make certain that this form is complete in its entirety and submitted with your system.

PHOSPHATE TEST

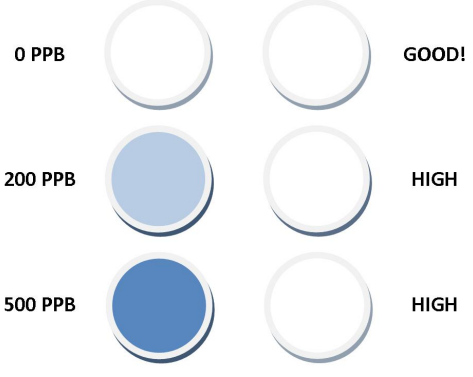

1. Rinse test vial, then fill to near top of the vial (approximately 2 cm from top)
2. Empty one powder packet into vial. Cap the vial and shake gently for one minute until the powder is dissolved.
3. Remove cap and compare to chart as shown within 2 minutes. Hold the vial straight up on the color chart (chart should be flat on table) and compare to colors. Look down through the vial as shown in example.

4414-8674231-A
Rev. 01-2014

© BluWater Technology, Inc. 2013
All trademarks or registered trademarks are the property of their respective owners.

BluWater Technology, Inc.
20 CR 632
Dayton, TX 77535
Toll Free: 855-447-8772

BluTech®
Powered by BluWater Technology