Bailey
BRAND CONSULTING

200 WEST GERMANTOWN PIKE
PLYMOUTH MEETING, PA 19462
P 610.940.9030 F 610.940.2254
BAILEYBRANDCONSULTING.COM

PROJECT	Frontline Gold Single Dose - 23 to 44lbs
JOB NUMBER	15ME0047
DATE	12.22.15
CLIENT	Merial
CONTACT	Billy Beck
FILENAME	73356 113302_FLGold_SingleDose_23_44lbs
SOFTWARE	Adobe CS5 (Mac)

PRINTING SPECIFICATIONS

4 COLOR PROCESS	PANTONE® 2196 C	PANTONE® 2193 C

PRINTER	
SEPARATOR	
DIE NUMBER	572912 Rev 1.0
DATE	11.06.15
FINAL SIZE	6.6875" x 3.75"
STOCK / SUBSTRATE	
HI-RES IMAGES	1
SUPPLIED VIA	FTP

NOTE TO PRINTER: Printer is responsible for all trapping issues, screen angles and press gain. Color chips shown above are for mark-up indications only. Match Pantone Color Chips when printing. All process colors specified in file have not been converted to correct process match percentages for production runs.

CLIENT APPROVAL

This signature verifies that Bailey Brand Consulting has been given approval to release mechanicals for the design contained herein.

CLIENT SIGNATURE _____ DATE _____

NOTE TO CLIENT: This block with signature must be faxed or returned to Bailey Brand Consulting before production can begin. Client assumes sole responsibility for printed artwork and copy accuracy.

12/29/15 - jqr - changes per regulatory
12/20/15 - change 1 monthy dose to caps
01/04/16 - jqr - ftp to Jay

2cc Pro Tube

6.6875"
[169.9]

AREAS INDICATED DARK BLUE PRINT 100% PMS 2196 C

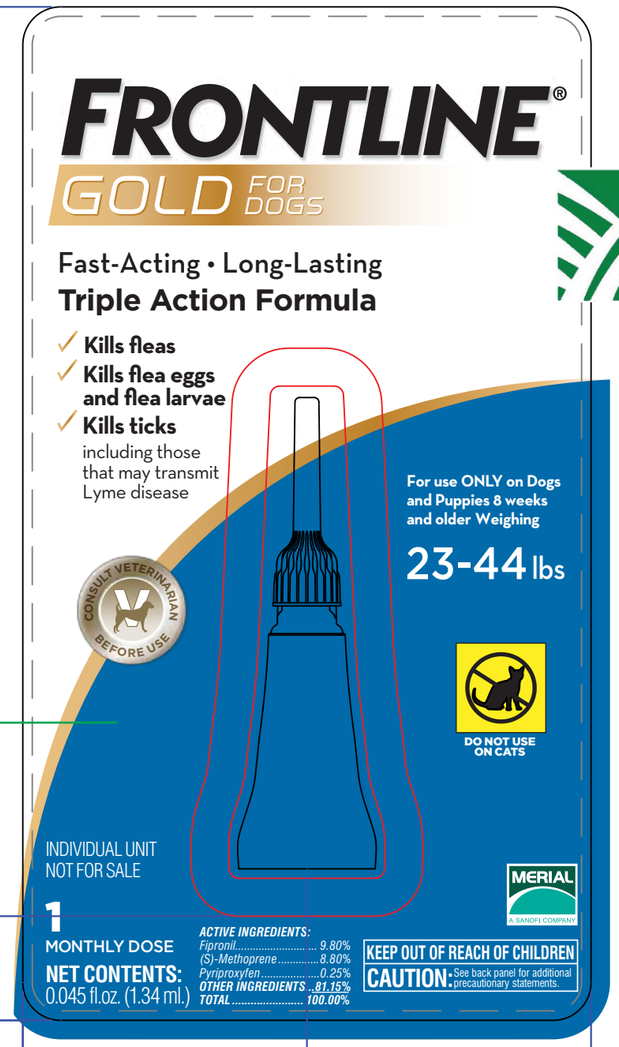

STATE OF HAWAII
Department of Agriculture
ACCEPTED
LICENSE NO. 9671.32

AREAS INDICATED BLUE PRINT PERCENTAGES OF PMS 2193 C AS INDICATED IN FILE

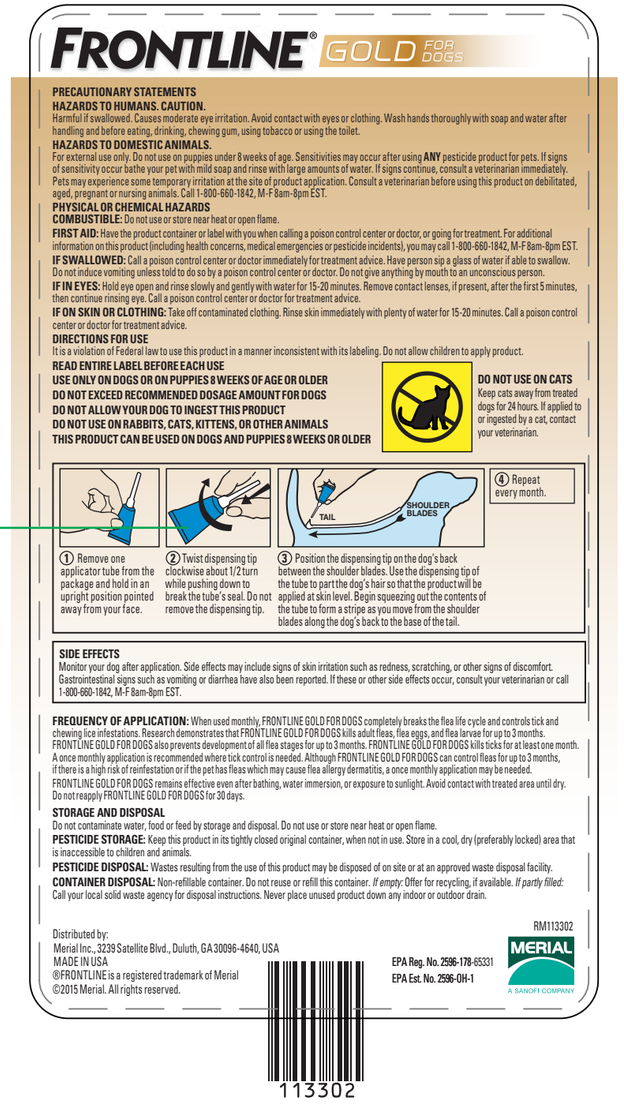
FRONTLINE® GOLD FOR DOGS

PRECAUTIONARY STATEMENTS
HAZARDS TO HUMANS. CAUTION.
Harmful if swallowed. Causes moderate eye irritation. Avoid contact with eyes or clothing. Wash hands thoroughly with soap and water after handling and before eating, drinking, chewing gum, using tobacco or using the toilet.
HAZARDS TO DOMESTIC ANIMALS.
For external use only. Do not use on puppies under 8 weeks of age. Sensitivities may occur after using **ANY** pesticide product for pets. If signs of sensitivity occur bathe your pet with mild soap and rinse with large amounts of water. If signs continue, consult a veterinarian immediately. Pets may experience some temporary irritation at the site of product application. Consult a veterinarian before using this product on debilitated, aged, pregnant or nursing animals. Call 1-800-660-1842, M-F 8am-8pm EST.
PHYSICAL OR CHEMICAL HAZARDS
COMBUSTIBLE: Do not use or store near heat or open flame.
FIRST AID: Have the product container or label with you when calling a poison control center or doctor, or going for treatment. For additional information on this product (including health concerns, medical emergencies or pesticide incidents), you may call 1-800-660-1842, M-F 8am-8pm EST.
IF SWALLOWED: Call a poison control center or doctor immediately for treatment advice. Have person sip a glass of water if able to swallow. Do not induce vomiting unless told to do so by a poison control center or doctor. Do not give anything by mouth to an unconscious person.
IF IN EYES: Hold eye open and rinse slowly and gently with water for 15-20 minutes. Remove contact lenses, if present, after the first 5 minutes, then continue rinsing eye. Call a poison control center or doctor for treatment advice.
IF ON SKIN OR CLOTHING: Take off contaminated clothing. Rinse skin immediately with plenty of water for 15-20 minutes. Call a poison control center or doctor for treatment advice.
DIRECTIONS FOR USE
It is a violation of Federal law to use this product in a manner inconsistent with its labeling. Do not allow children to apply product.
READ ENTIRE LABEL BEFORE EACH USE
USE ONLY ON DOGS OR ON PUPPIES 8 WEEKS OF AGE OR OLDER
DO NOT EXCEED RECOMMENDED DOSAGE AMOUNT FOR DOGS
DO NOT ALLOW YOUR DOG TO INGEST THIS PRODUCT
DO NOT USE ON RABBITS, CATS, KITTENS, OR OTHER ANIMALS
THIS PRODUCT CAN BE USED ON DOGS AND PUPPIES 8 WEEKS OR OLDER
DO NOT USE ON CATS
Keep cats away from treated dogs for 24 hours. If applied to or ingested by a cat, contact your veterinarian.
TAIL
SHOULDER BLADES
④ Repeat every month.
① Remove one applicator tube from the package and hold in an upright position pointed away from your face.
② Twist dispensing tip clockwise about 1/2 turn while pushing down to break the tube's seal. Do not remove the dispensing tip.
③ Position the dispensing tip on the dog's back between the shoulder blades. Use the dispensing tip of the tube to part the dog's hair so that the product will be applied at skin level. Begin squeezing out the contents of the tube to form a stripe as you move from the shoulder blades along the dog's back to the base of the tail.
SIDE EFFECTS
Monitor your dog after application. Side effects may include signs of skin irritation such as redness, scratching, or other signs of discomfort. Gastrointestinal signs such as vomiting or diarrhea have also been reported. If these or other side effects occur, consult your veterinarian or call 1-800-660-1842, M-F 8am-8pm EST.
FREQUENCY OF APPLICATION: When used monthly, FRONTLINE GOLD FOR DOGS completely breaks the flea life cycle and controls tick and chewing lice infestations. Research demonstrates that FRONTLINE GOLD FOR DOGS kills adult fleas, flea eggs, and flea larvae for up to 3 months. FRONTLINE GOLD FOR DOGS also prevents development of all flea stages for up to 3 months. FRONTLINE GOLD FOR DOGS kills ticks for at least one month. A once monthly application is recommended where tick control is needed. Although FRONTLINE GOLD FOR DOGS can control fleas for up to 3 months, if there is a high risk of reinfestation or if the pet has fleas which may cause flea allergy dermatitis, a once monthly application may be needed.
FRONTLINE GOLD FOR DOGS remains effective even after bathing, water immersion, or exposure to sunlight. Avoid contact with treated area until dry. Do not reapply FRONTLINE GOLD FOR DOGS for 30 days.
STORAGE AND DISPOSAL
Do not contaminate water, food or feed by storage and disposal. Do not use or store near heat or open flame.
PESTICIDE STORAGE: Keep this product in its tightly closed original container, when not in use. Store in a cool, dry (preferably locked) area that is inaccessible to children and animals.
PESTICIDE DISPOSAL: Wastes resulting from the use of this product may be disposed of on site or at an approved waste disposal facility.
CONTAINER DISPOSAL: Non-refillable container. Do not reuse or refill this container. *If empty:* Offer for recycling, if available. *If partly filled:* Call your local solid waste agency for disposal instructions. Never place unused product down any indoor or outdoor drain.
RM113302
Distributed by:
Merial Inc., 3239 Satellite Blvd., Duluth, GA 30096-4640, USA
MADE IN USA
®FRONTLINE is a registered trademark of Merial
©2015 Merial. All rights reserved.
EPA Reg. No. 2596-178-65331
EPA Est. No. 2596-OH-1
MERIAL
A SANOFI COMPANY
113302

0.6875"

1.8750"
[47.6]

3.7500"
[95.3]

ARTWORK PRINTS 4 COLOR PROCESS AS INDICATED IN THE FILE UNLESS NOTED OTHERWISE

Blister Card Spec (Pro-Cision)

Spec: 572912 Rev 1.0
Date: 2015-11-06
Rev 1.0 Pro-Cision Tube, 1 Ct

FRONTLINE® GOLD FOR DOGS

For use ONLY on Dogs and Puppies 8 weeks and older | Weighing 23-44 lbs

PRECAUTIONARY STATEMENTS

HAZARDS TO HUMANS. CAUTION.
Harmful if swallowed. Causes moderate eye irritation. Avoid contact with eyes or clothing. Wash hands thoroughly with soap and water after handling and before eating, drinking, chewing gum, using tobacco or using the toilet.

HAZARDS TO DOMESTIC ANIMALS.
For external use only. Do not use on puppies under 8 weeks of age. Sensitivities may occur after using **ANY** pesticide product for pets. If signs of sensitivity occur bathe your pet with mild soap and rinse with large amounts of water. If signs continue, consult a veterinarian immediately. Pets may experience some temporary irritation at the site of product application. Consult a veterinarian before using this product on debilitated, aged, pregnant or nursing animals. Call 1-800-660-1842, M-F 8am-8pm EST.

PHYSICAL OR CHEMICAL HAZARDS
COMBUSTIBLE: Do not use or store near heat or open flame.

FIRST AID
Have the product container or label with you when calling a poison control center or doctor, or going for treatment. For additional information on this product (including health concerns, medical emergencies or pesticide incidents), you may call 1-800-660-1842, M-F 8am-8pm EST.
IF SWALLOWED: Call a poison control center or doctor immediately for treatment advice. Have person sip a glass of water if able to swallow. Do not induce vomiting unless told to do so by a poison control center or doctor. Do not give anything by mouth to an unconscious person.
IF IN EYES: Hold eye open and rinse slowly and gently with water for 15-20 minutes. Remove contact lenses, if present, after the first 5 minutes, then continue rinsing eye. Call a poison control center or doctor for treatment advice.
IF ON SKIN OR CLOTHING: Take off contaminated clothing. Rinse skin immediately with plenty of water for 15-20 minutes. Call a poison control center or doctor for treatment advice.

DIRECTIONS FOR USE
It is a violation of Federal law to use this product in a manner inconsistent with its labeling. Do not allow children to apply product.

READ ENTIRE LABEL BEFORE EACH USE
USE ONLY ON DOGS OR ON PUPPIES 8 WEEKS OF AGE OR OLDER
DO NOT EXCEED RECOMMENDED DOSAGE AMOUNT FOR DOGS
DO NOT ALLOW YOUR DOG TO INGEST THIS PRODUCT
DO NOT USE ON RABBITS, CATS, KITTENS, OR OTHER ANIMALS
THIS PRODUCT CAN BE USED ON DOGS AND PUPPIES 8 WEEKS OR OLDER

DO NOT USE ON CATS
Keep cats away from treated dogs for 24 hours.
If applied to or ingested by a cat, contact your veterinarian.

1. Remove one applicator tube from the package and hold in an upright position pointed away from your face.
2. Twist dispensing tip clockwise about 1/2 turn while pushing down to break the tube's seal. Do not remove the dispensing tip.
3. Position the dispensing tip on the dog's back between the shoulder blades. Use the dispensing tip of the tube to part the dog's hair so that the product will be applied at skin level. Begin squeezing out the contents of the tube to form a stripe as you move from the shoulder blades along the dog's back to the base of the tail.
4. Repeat every month.

SIDE EFFECTS
Monitor your dog after application. Side effects may include signs of skin irritation such as redness, scratching, or other signs of discomfort. Gastrointestinal signs such as vomiting or diarrhea have also been reported. If these or other side effects occur, consult your veterinarian or call 1-800-660-1842, M-F 8am-8pm EST.

FREQUENCY OF APPLICATION: When used monthly, FRONTLINE GOLD FOR DOGS completely breaks the flea life cycle and controls tick and chewing lice infestations. Research demonstrates that FRONTLINE GOLD FOR DOGS kills adult fleas, flea eggs, and flea larvae for up to 3 months. FRONTLINE GOLD FOR DOGS also prevents development of all flea stages for up to 3 months. FRONTLINE GOLD FOR DOGS kills ticks for at least one month. A once monthly application is recommended where tick control is needed. Although FRONTLINE GOLD FOR DOGS can control fleas for up to 3 months, if there is a high risk of reinfestation or if the pet has fleas which may cause flea allergy dermatitis, a once monthly application may be needed.
FRONTLINE GOLD FOR DOGS remains effective even after bathing, water immersion, or exposure to sunlight. Avoid contact with treated area until dry. Do not reapply FRONTLINE GOLD FOR DOGS for 30 days.

STORAGE AND DISPOSAL
Do not contaminate water, food or feed by storage and disposal. Do not use or store near heat or open flame.
PESTICIDE STORAGE: Keep this product in its tightly closed original container, when not in use. Store in a cool, dry (preferably locked) area that is inaccessible to children and animals.
PESTICIDE DISPOSAL: Wastes resulting from the use of this product may be disposed of on site or at an approved waste disposal facility.
CONTAINER DISPOSAL: Non-refillable container. Do not reuse or refill this container. *If empty:* Offer for recycling, if available. *If partly filled:* Call your local solid waste agency for disposal instructions. Never place unused product down any indoor or outdoor drain.

Distributed by:
Merial Inc., 3239 Satellite Blvd., Duluth, GA 30096-4640, USA
MADE IN USA
®FRONTLINE is a registered trademark of Merial
©2015 Merial. All rights reserved.
EPA Reg. No. 2596-178-65331
EPA Est. No. 2596-OH-1

RM113489

MERIAL A SANOFI COMPANY

113489

FRONTLINE® GOLD FOR DOGS

For use ONLY on Dogs and Puppies 8 weeks and older
Weighing 23-44 lbs | 3 DOSES

Fast-Acting • Long-Lasting
Triple Action Formula

- ✓ **Kills fleas**
- ✓ **Kills flea eggs and flea larvae**
- ✓ **Kills ticks** including those that may transmit Lyme disease

3 MONTHLY DOSES
NET CONTENTS: 0.135 fl.oz. (4.02 ml.)
CONTAINS 3-0.045 fl.oz. (1.34 ml.) APPLICATORS

For use ONLY on Dogs and Puppies 8 weeks and older Weighing
23-44 lbs

DO NOT USE ON CATS

ACTIVE INGREDIENTS:
Fipronil 9.80%
(S)-Methoprene 8.80%
Pyriproxyfen 0.25%
OTHER INGREDIENTS...81.15%
TOTAL 100.00%

KEEP OUT OF REACH OF CHILDREN
CAUTION: See back panel for additional precautionary statements.

MERIAL A SANOFI COMPANY

FRONTLINE® GOLD FOR DOGS

For use ONLY on Dogs and Puppies 8 weeks and older
Weighing 23-44 lbs | 3 DOSES

FRONTLINE® GOLD FOR DOGS

For use ONLY on Dogs and Puppies 8 weeks and older
Weighing 23-44 lbs | 3 DOSES

Bailey BRAND CONSULTING
200 WEST GERMANTOWN PIKE
PLYMOUTH MEETING, PA 19462
P 610.940.9030 F 610.940.2254
BAILEYBRANDCONSULTING.COM

PROJECT	Frontline Gold 3pk - 23 to 44lbs
JOB NUMBER	15ME0047
DATE	12.22.15
CLIENT	Merial
CONTACT	Billy Beck
FILENAME	73366_113489_FLGold_23_44lbsv2
SOFTWARE	Adobe CS5 (Mac)

PRINTING SPECIFICATIONS

NOTE TO PRINTER: Printer is responsible for all trapping issues, screen angles and press gain. Color chips shown below are for mark-up indications only. Match Pantone Color Chips when printing. All process colors specified in file have not been converted to correct process match percentages for production runs.

4 COLOR PROCESS | PANTONE® 2196 C | PANTONE® 2193 C

PRINTER	
SEPARATOR	
DIE NUMBER	572907 Rev 1.0
DATE	10.28.15
FINAL SIZE	7.834" x 11.673"
STOCK / SUBSTRATE	
HI-RES IMAGES	2
SUPPLIED VIA	FTP

CLIENT APPROVAL

This signature verifies that Bailey Brand Consulting has been given approval to release mechanicals for the design contained herein.

CLIENT SIGNATURE _____ DATE _____

NOTE TO CLIENT: This block with signature must be faxed or returned to Bailey Brand Consulting before production can begin. Client assumes sole responsibility for printed artwork and copy accuracy.

12/29/15 - Changes from regulatory
01/04/16 - ftp to Standard
01/05/16 - jqr - change back to 3 doses on minor flaps, ftp to Standard

113494

FRONTLINE® GOLD FOR DOGS

For use ONLY on Dogs and Puppies 8 weeks and older Weighing

23-44 lbs

6 DOSES

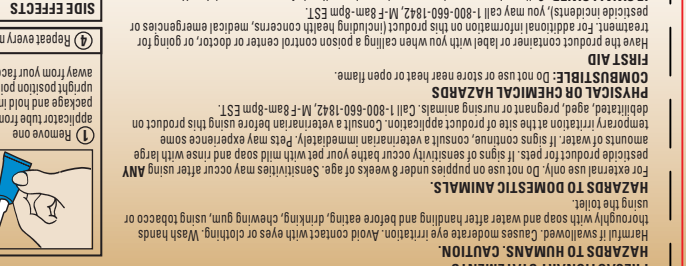

Fast-Acting • Long-Lasting

Triple Action Formula

- ✓ **Kills fleas**
- ✓ **Kills flea eggs and flea larvae**
- ✓ **Kills ticks** including those that may transmit Lyme disease

CONSULT VETERINARIAN BEFORE USE

6 MONTHLY DOSES

NET CONTENTS: 0.27 fl.oz. (8.04 ml.)

CONTAINS 6-0.045 fl.oz. (1.34 ml.) APPLICATORS

For use ONLY on Dogs and Puppies 8 weeks and older Weighing

23-44 lbs

DO NOT USE ON CATS

ACTIVE INGREDIENTS:

Fipronil..... 9.80%
(S)-Methoprene..... 8.80%
Pyriproxyfen..... 0.25%
OTHER INGREDIENTS...81.15%
TOTAL 100.00%

KEEP OUT OF REACH OF CHILDREN

CAUTION: See back panel for additional precautionary statements.

MERIAL A SANOFI COMPANY

113494

PRECAUTIONARY STATEMENTS

HAZARDS TO HUMANS. CAUTION.

Harmful if swallowed. Causes moderate eye irritation. Avoid contact with eyes or clothing. Wash hands thoroughly with soap and water after handling and before eating, drinking, chewing gum, using tobacco or using the toilet.

HAZARDS TO DOMESTIC ANIMALS.

For external use only. Do not use on puppies under 8 weeks of age. Sensitivities may occur after using **ANY** pesticide product for pets. If signs of sensitivity occur bathe your pet with mild soap and rinse with large amounts of water. If signs continue, consult a veterinarian immediately. Pets may experience some temporary irritation at the site of product application. Consult a veterinarian before using this product on debilitated, aged, pregnant or nursing animals. Call 1-800-660-1842, M-F 8am-8pm EST.

PHYSICAL OR CHEMICAL HAZARDS

COMBUSTIBLE: Do not use or store near heat or open flame.

FIRST AID

Have the product container or label with you when calling a poison control center or doctor, or going for treatment. For additional information on this product (including health concerns, medical emergencies or pesticide incidents), you may call 1-800-660-1842, M-F 8am-8pm EST.

IF SWALLOWED: Call a poison control center or doctor immediately for treatment advice. Have person sip a glass of water if able to swallow. Do not induce vomiting unless told to do so by a poison control center or doctor. Do not give anything by mouth to an unconscious person.

IF IN EYES: Hold eye open and rinse slowly and gently with water for 15-20 minutes. Remove contact lenses, if present, after the first 5 minutes, then continue rinsing eye. Call a poison control center or doctor for treatment advice.

IF ON SKIN OR CLOTHING: Take off contaminated clothing. Rinse skin immediately with plenty of water for 15-20 minutes. Call a poison control center or doctor for treatment advice.

DIRECTIONS FOR USE

It is a violation of Federal law to use this product in a manner inconsistent with its labeling. Do not allow children to apply product.

READ ENTIRE LABEL BEFORE EACH USE

USE ONLY ON DOGS OR ON PUPPIES 8 WEEKS OF AGE OR OLDER

DO NOT EXCEED RECOMMENDED DOSAGE AMOUNT FOR DOGS

DO NOT ALLOW YOUR DOG TO INGEST THIS PRODUCT

DO NOT USE ON RABBITS, CATS, KITTENS, OR OTHER ANIMALS

THIS PRODUCT CAN BE USED ON DOGS AND PUPPIES 8 WEEKS OR OLDER

DO NOT USE ON CATS

Keep cats away from treated dogs for 24 hours.
If applied to or ingested by a cat, contact your veterinarian.

SIDE EFFECTS

Monitor your dog after application. Side effects may include signs of skin irritation such as redness, scratching, or other signs of discomfort. Gastrointestinal signs such as vomiting or diarrhea have also been reported. If these or other side effects occur, consult your veterinarian or call 1-800-660-1842, M-F 8am-8pm EST.

1. Remove one applicator tube from the package and hold in an upright position pointed away from your face.
2. Twist dispensing tip clockwise about 1/2 turn while pushing down to break the tube's seal. Do not remove the dispensing tip.
3. Position the dispensing tip on the dog's back between the shoulder blades. Use the dispensing tip of the tube to part the dog's hair so that the product will be applied at skin level. Begin squeezing out the contents of the tube to form a stripe as you move from the shoulder blades along the dog's back to the base of the tail.
4. Repeat every month.

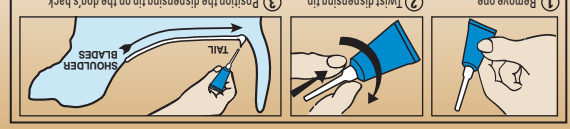

FREQUENCY OF APPLICATION: When used monthly, FRONTLINE GOLD FOR DOGS completely breaks the flea life cycle and controls tick and chewing lice infestations. Research demonstrates that FRONTLINE GOLD FOR DOGS kills adult fleas, flea eggs, and flea larvae for up to 3 months. FRONTLINE GOLD FOR DOGS also prevents development of all flea stages for up to 3 months. FRONTLINE GOLD FOR DOGS kills ticks for at least one month. A once monthly application is recommended where tick control is needed. Although FRONTLINE GOLD FOR DOGS can control fleas for up to 3 months, if there is a high risk of reinfestation or if the pet has fleas which may cause flea allergy dermatitis, a once monthly application may be needed.

FRONTLINE GOLD FOR DOGS remains effective even after bathing, water immersion, or exposure to sunlight. Avoid contact with treated area until dry. Do not reapply FRONTLINE GOLD FOR DOGS for 30 days.

STORAGE AND DISPOSAL

Do not contaminate water, food or feed by storage and disposal. Do not use or store near heat or open flame.

PESTICIDE STORAGE: Keep this product in its tightly closed original container, when not in use. Store in a cool, dry (preferably locked) area that is inaccessible to children and animals.

PESTICIDE DISPOSAL: Wastes resulting from the use of this product may be disposed of on site or at an approved waste disposal facility.

CONTAINER DISPOSAL: Non-refillable container. Do not reuse or refill this container. *If empty:* Offer for recycling, if available. *If partly filled:* Call your local solid waste agency for disposal instructions. Never place unused product down any indoor or outdoor drain.

Distributed by:
Merial Inc., 3239 Satellite Blvd., Duluth, GA 30096-4640, USA
MADE IN USA
®FRONTLINE is a registered trademark of Merial
©2015 Merial. All rights reserved.

EPA Reg. No. 2596-178-65331
EPA Est. No. 2596-OH-1

RM113494

MERIAL A SANOFI COMPANY

FRONTLINE® GOLD FOR DOGS

For use ONLY on Dogs and Puppies 8 weeks and older Weighing

23-44 lbs

6 DOSES

FRONTLINE® GOLD FOR DOGS

For use ONLY on Dogs and Puppies 8 weeks and older Weighing

23-44 lbs

6 DOSES

FRONTLINE® GOLD FOR DOGS

For use ONLY on Dogs and Puppies 8 weeks and older Weighing

23-44 lbs

6 DOSES

Bailey BRAND CONSULTING

200 WEST GERMANTOWN PIKE
PLYMOUTH MEETING, PA 19462
P 610.940.9030 F 610.940.2254
BAILEYBRANDCONSULTING.COM

PROJECT	Frontline Gold 6pk - 23 to 44lbs
JOB NUMBER	15ME0047
DATE	12.22.15
CLIENT	Merial
CONTACT	Billy Beck
FILENAME	73371 113494_FLGold_6pk_23_44lbs
SOFTWARE	Adobe CS5 (Mac)

PRINTING SPECIFICATIONS

NOTE TO PRINTER: Printer is responsible for all trapping issues, screen angles and press gain. Color chips shown below are for mark-up indications only. Match Pantone Color Chips when printing. All process colors specified in file have not been converted to correct process match percentages for production runs.

4 COLOR PROCESS | PANTONE® 2196 C | PANTONE® 2193 C

PRINTER	
SEPARATOR	
DIE NUMBER	572906 Rev 1.2
DATE	10.28.15
FINAL SIZE	9.762" x 13.603"
STOCK / SUBSTRATE	
HI-RES IMAGES	2
SUPPLIED VIA	FTP

CLIENT APPROVAL

This signature verifies that Bailey Brand Consulting has been given approval to release mechanicals for the design contained herein.

CLIENT SIGNATURE _____ DATE _____

NOTE TO CLIENT: This block with signature must be faxed or returned to Bailey Brand Consulting before production can begin. Client assumes sole responsibility for printed artwork and copy accuracy.

12/29/15 - jqr - changes per regulatory
12/30/15 - change 6 monthy doses to caps
01/04/16 - jqr - release to Standard
01/05/16 - jqr - change back to 3 doses on minor flaps, ftp to Standard

ARTWORK PRINTS BLACK AS INDICATED IN THE FILE

UPC IS FPO. PRINTER TO ADD ACTUAL UPC.
PRINTER IS RESPONSIBLE FOR SCANNABILITY.

Bailey
BRAND CONSULTING

200 WEST GERMANTOWN PIKE
PLYMOUTH MEETING, PA 19462
P 610.940.9030 F 610.940.2254
BAILEYBRANDCONSULTING.COM

PROJECT	Frontline Gold Dog Insert - 23-44 lbs
JOB NUMBER	15ME0047
DATE	12.21.15
CLIENT	Merial
CONTACT	Billy Beck
FILENAME	113515_FLGold_Dog_23_44lbs_Insert
SOFTWARE	Adobe CC 2015 (Mac)

PRINTING SPECIFICATIONS

BLACK

PRINTER	
SEPARATOR	
DIE NUMBER	573701 Rev 1.0
DATE	11.18.15
FINAL SIZE	3.5" x 7"
STOCK / SUBSTRATE	
HI-RES IMAGES	
SUPPLIED VIA	FTP

NOTE TO PRINTER: Printer is responsible for all trapping issues, screen angles and press gain. Color chips shown above are for mark-up indications only. Match Pantone Color Chips when printing. All process colors specified in file have not been converted to correct process match percentages for production runs.

CLIENT APPROVAL

This signature verifies that Bailey Brand Consulting has been given approval to release mechanicals for the design contained herein.

CLIENT SIGNATURE DATE

NOTE TO CLIENT: This block with signature must be faxed or returned to Bailey Brand Consulting before production can begin. Client assumes sole responsibility for printed artwork and copy accuracy.

12/29/15 - jqr - changes per regulatory
01/04/16 - jqr - release to Great Atlantic

FRONTLINE® GOLD FOR DOGS

For use ONLY on Dogs and Puppies 8 weeks and older | Weighing 23-44 lbs

Fast-Acting • Long-Lasting • Triple Action Formula
Kills fleas, flea eggs, flea larvae and ticks including those that may transmit Lyme Disease

ACTIVE INGREDIENTS:
Fipronil *9.80%*
(S)-Methoprene *8.80%*
Pyriproxyfen *0.25%*
OTHER INGREDIENTS ***81.15%***
TOTAL ***100.00%***

PRECAUTIONARY STATEMENTS

HAZARDS TO HUMANS. CAUTION.
Harmful if swallowed. Causes moderate eye irritation. Avoid contact with eyes or clothing. Wash hands thoroughly with soap and water after handling and before eating, drinking, chewing gum, using tobacco or using the toilet.

HAZARDS TO DOMESTIC ANIMALS.
For external use only. Do not use on puppies under 8 weeks of age. Sensitivities may occur after using **ANY** pesticide product for pets. If signs of sensitivity occur bathe your pet with mild soap and rinse with large amounts of water. If signs continue, consult a veterinarian immediately. Pets may experience some temporary irritation at the site of product application. Consult a veterinarian before using this product on debilitated, aged, pregnant or nursing animals. Call 1-800-660-1842, M-F 8am-8pm EST.

PHYSICAL OR CHEMICAL HAZARDS
COMBUSTIBLE: Do not use or store near heat or open flame.

FIRST AID
Have the product container or label with you when calling a poison control center or doctor, or going for treatment. For additional information on this product (including health concerns, medical emergencies or pesticide incidents), you may call 1-800-660-1842, M-F 8am-8pm EST.

IF SWALLOWED: Call a poison control center or doctor immediately for treatment advice. Have person sip a glass of water if able to swallow. Do not induce vomiting unless told to do so by a poison control center or doctor. Do not give anything by mouth to an unconscious person.

IF IN EYES: Hold eye open and rinse slowly and gently with water for 15-20 minutes. Remove contact lenses, if present, after the first 5 minutes, then continue rinsing eye. Call a poison control center or doctor for treatment advice.

IF ON SKIN OR CLOTHING: Take off contaminated clothing. Rinse skin immediately with plenty of water for 15-20 minutes. Call a poison control center or doctor for treatment advice.

DIRECTIONS FOR USE
It is a violation of Federal law to use this product in a manner inconsistent with its labeling. Do not allow children to apply product.

7.0000
[177.80]

READ ENTIRE LABEL BEFORE EACH USE
USE ONLY ON DOGS OR ON PUPPIES 8 WEEKS OF AGE OR OLDER
DO NOT EXCEED RECOMMENDED DOSAGE AMOUNT FOR DOGS
DO NOT ALLOW YOUR DOG TO INGEST THIS PRODUCT
DO NOT USE ON RABBITS, CATS, KITTENS, OR OTHER ANIMALS
THIS PRODUCT CAN BE USED ON DOGS AND PUPPIES 8 WEEKS OR OLDER

DO NOT USE ON CATS
Keep cats away from treated dogs for 24 hours.
If applied to or ingested by a cat, contact your veterinarian.

① Remove one applicator tube from the package and hold in an upright position pointed away from your face.
② Twist dispensing tip clockwise about 1/2 turn while pushing down to break the tube's seal. Do not remove the dispensing tip.
③ Position the dispensing tip on the dog's back between the shoulder blades. Use the dispensing tip of the tube to part the dog's hair so that the product will be applied at skin level. Begin squeezing out the contents of the tube to form a stripe as you move from the shoulder blades along the dog's back to the base of the tail.
④ Repeat every month.

SIDE EFFECTS
Monitor your dog after application. Side effects may include signs of skin irritation such as redness, scratching, or other signs of discomfort. Gastrointestinal signs such as vomiting or diarrhea have also been reported. If these or other side effects occur, consult your veterinarian or call 1-800-660-1842, M-F 8am-8pm EST.

STORAGE AND DISPOSAL
Do not contaminate water, food or feed by storage and disposal. Do not use or store near heat or open flame.

PESTICIDE STORAGE: Keep this product in its tightly closed original container, when not in use. Store in a cool, dry (preferably locked) area that is inaccessible to children and animals.

PESTICIDE DISPOSAL: Wastes resulting from the use of this product may be disposed of on site or at an approved waste disposal facility.

CONTAINER DISPOSAL: Non-refillable container. Do not reuse or refill this container. *If empty:* Offer for recycling, if available. *If partly filled:* Call your local solid waste agency for disposal instructions. Never place unused product down any indoor or outdoor drain.

113515

Distributed by:
Merial, Inc., 3239 Satellite Blvd., Duluth, GA 30096-4640, USA
MADE IN USA
®FRONTLINE is a registered trademark of Merial.
©2015 Merial, Inc., Duluth, GA.
All rights reserved.
EPA Reg. No. 2596-178-65331
EPA Est. No. 2596-OH-1

RM113515
MERIAL
A SANOFI COMPANY

1.1500
[29.21]

1.1500
[29.21]

3.5000
[88.90]

1.2000
[30.48]

3.5000
[88.90]

Hartz®

Legend

Copy Area

No Varnish

No Copy

Knife

Score Lines

RM Bar Code

Printed Leaflet Shall Be Delivered to Hartz Folded along the long axis (folded size 1.2 x 7.0)

Folded, Printed Insert

Spec: 573701 Rev 1.0
Date: 2015-11-18
Rev 1.0 New Die Line

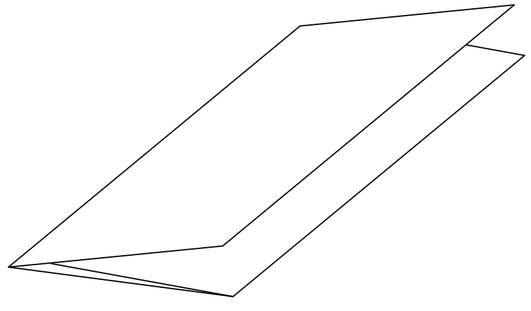

Fold Pattern

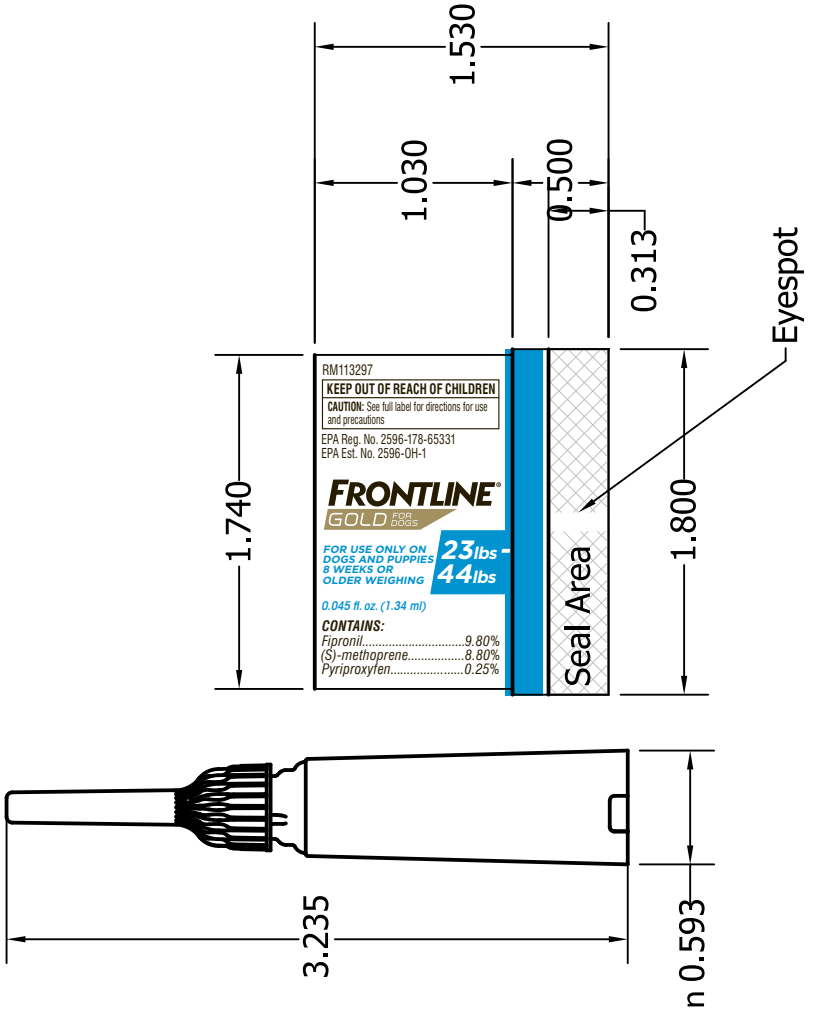

File Printed @ 100%

Hartz

Date: 11/11/15 Job No:

File Name: 73371 113297 Frontline Gold Dog Tube.ai

Packaging Spec #: 2cc ProFlo Tube

Software: Illustrator CS5

HARTZ MOUNTAIN CORPORATION

400 Plaza Drive • Secaucus, NJ 07094 201.271.4800 Fax: 201.271.0362

PANTONE® 871 C

BLACK

PANTONE® Proces blue

Artwork Approval	Initials	Date
Mktg		
Mktg (Dir/Sr.Dir)		
Package Engineering		
R&D		
Regulatory		
Legal		
Creative Services		

11/11/15 jqr - new
11/18/15 jqr - add in logo, changes to epa reg number
11/19/15 jqr - change **active ingredients** to **contains**
11/20/15 jqr - release to PP

Example with 2D barcode and pre-print text

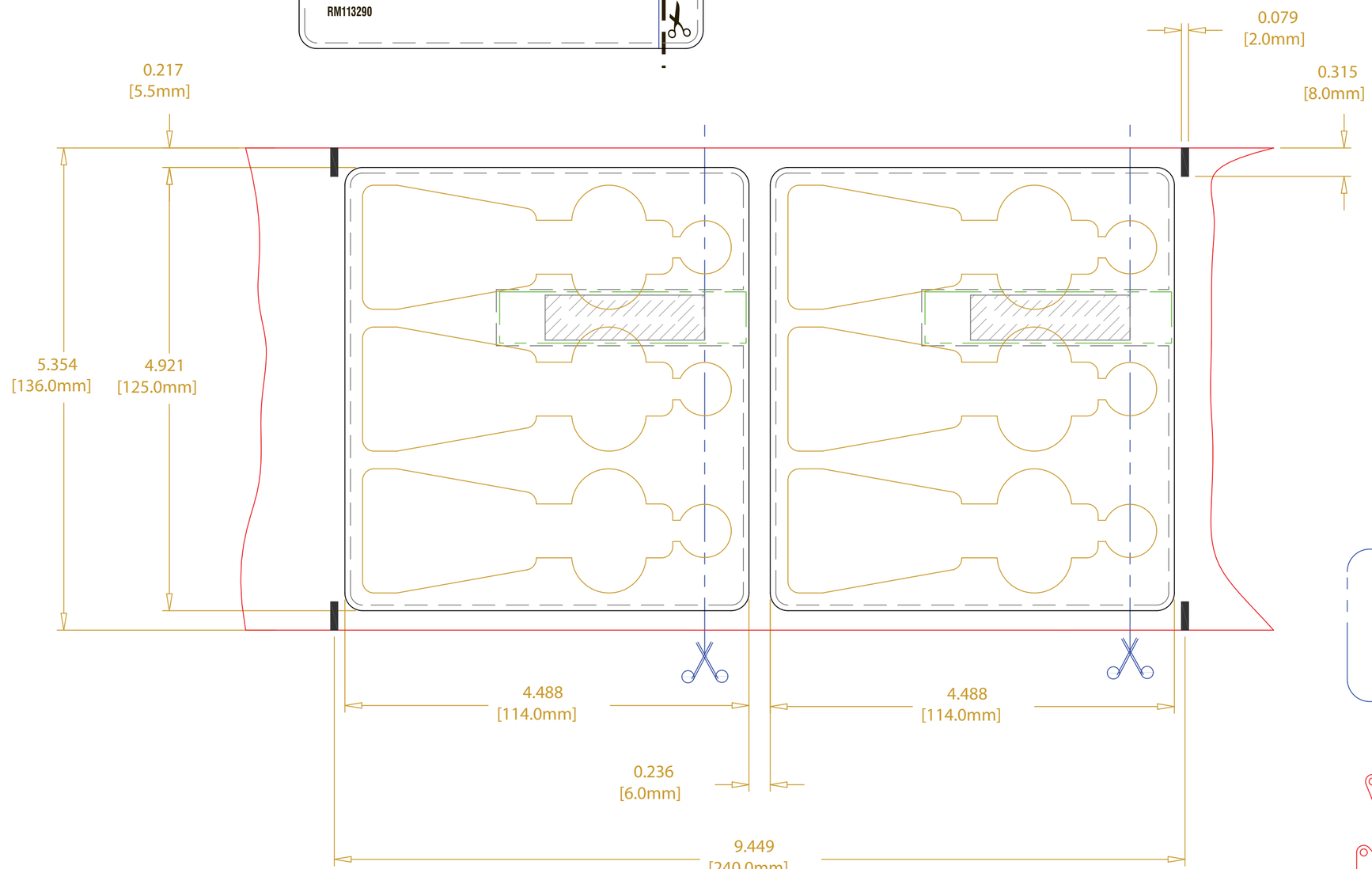

Hartz

Legend

- Copy Area
- No Varnish
- No Copy
- Eyespot
- Film web
- Knife
- Scissor Line

FIP Lidding Stock

Spec: 565896 Rev 1.0

Date: 08/24/2012

Revisions

1.0 NEW FIP Lidding Stock Die Lines

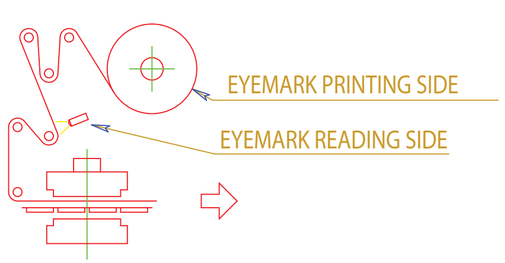

VENDOR NOTE: COLOR ACCURATE PROOF REQUIRED.
Do not proceed to print without a signed proof from Hartz Mountain.
Finished product that was not shown a proof will not be accepted.

File Printed @ 100%

Do not use PDF files for printing.
Files produced from PDFs will not be approved.

HISTORY

11/13/15 - jqr - revision from existing,new RM, new epa #
11/18/15 jqr - add in logo, changes to epa reg number
11/19/15 jqr - match caution statement on tube
11/20/15 jqr - release to TekniPlex

Artwork Approval	Initials	Date
Mktg		
Mktg (Dir/Sr.Dir)		
Package Engineering		
R&D		
Regulatory		
Legal		
Creative Services		

PANTONE® 871 C — BLACK

Hartz

Date: 11/11/15
File Name: 113290 Frontline Gold dog lidding stock
Packaging Spec: 565896 Rev 1.0
Software: Illustrator CS5

Job No:

HARTZ MOUNTAIN CORPORATION
400 Plaza Drive • Secaucus, NJ 07094 201.271.4800 Fax: 201.271.0362

AREAS INDICATED GOLD PRINT
PANTONE 7510 C

DIE LINE PROVIDED WAS MODIFIED BY BAILEY. PRINTER TO CONFIRM DIE LINE IS CORRECT AND ADJUST IF/WHERE NECESSARY.

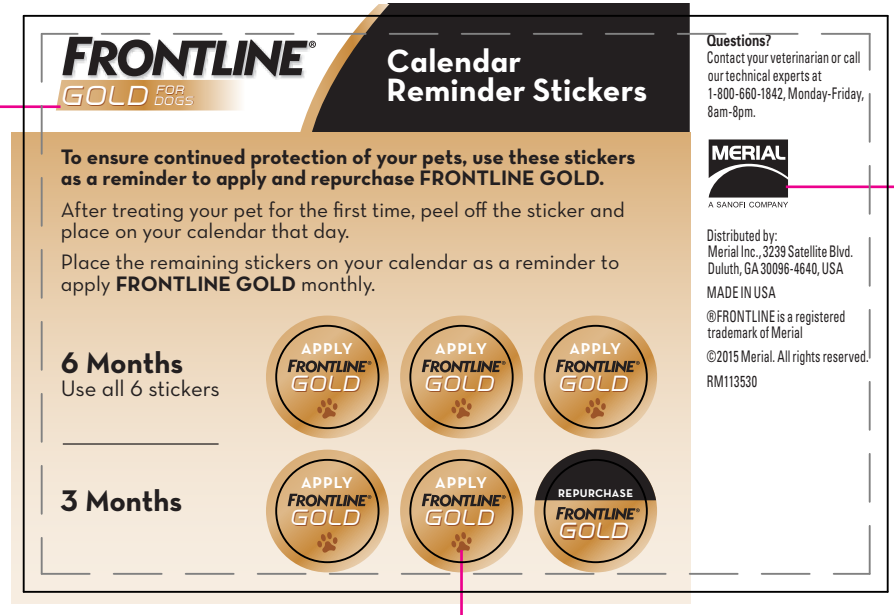

AREAS AND TYPE INDICATED BLACK PRINT BLACK

AREAS AND TYPE INDICATED BROWN PRINT PANTONE 7516 C

Bailey
BRAND CONSULTING

200 WEST GERMANTOWN PIKE
PLYMOUTH MEETING, PA 19462
P 610.940.9030 F 610.940.2254
BAILEYBRANDCONSULTING.COM

PROJECT	Frontline Gold Reminder Stickers - Dogs
JOB NUMBER	15ME0047
DATE	01.08.16
CLIENT	Merial
CONTACT	Billy Beck
FILENAME	15ME0047_M02_FLGold_RemindSticker_Dog
SOFTWARE	Adobe CC 2015 (Mac)

PRINTING SPECIFICATIONS

NOTE TO PRINTER: Printer is responsible for all trapping issues, screen angles and press gain. Color chips shown below are for mark-up indications only. Match Pantone Color Chips when printing. All process colors specified in file have not been converted to correct process match percentages for production runs.

BLACK	PANTONE® 7510 C	PANTONE® 7516 C	

PRINTER	
SEPARATOR	
DIE NUMBER	572835 Rev 1.0
DATE	11.12.15
FINAL SIZE	4.5" x 3"
STOCK / SUBSTRATE	
HI-RES IMAGES SUPPLIED VIA	Email

CLIENT APPROVAL

This signature verifies that Bailey Brand Consulting has been given approval to release mechanicals for the design contained herein.

Nikkia Starks — CLIENT SIGNATURE
01.08.16 — DATE

NOTE TO CLIENT: This block with signature must be faxed or returned to Bailey Brand Consulting before production can begin. Client assumes sole responsibility for printed artwork and copy accuracy.

113530_FLGold_RemindSticker_Dog
01/11/16 - jqr - release to GA