HAWAII ADMINISTRATIVE RULES

TITLE 12 DEPARTMENT OF LABOR AND INDUSTRIAL RELATIONS

SUBTITLE 8

DIVISION OF OCCUPATIONAL SAFETY AND HEALTH

CHAPTER 231

MANLIFTS

§12-231-1 Application
§12-231-2 Definitions
§12-231-3 General requirements
§12-231-4 Mechanical requirements
§12-231-5 Instruction and warning signs
§12-231-6 Operating rules
§12-231-7 Tests and inspections
§12-231-8 Operating permit
§12-231-9 Sources of codes

Historical Note: Chapter 231 of title 12 is based on chapter 361 of the Hawaii Occupational Safety and Health Standards, Rules and Regulations. [Eff. 7/11/74; am 6/7/76; am 12/30/76; am 8/22/77; am 8/11/78; am 8/23/79; R 7/12/82]

§12-231-1 Application. This chapter applies to manlifts used to carry only authorized personnel, trained in their use. Manlifts shall not be available to the general public and, if located in buildings to which the public has access, the manlift or manlifts shall be located in an enclosure protected by self-closing spring-locked doors for which the keys are restricted to only authorized persons. Manlifts covered by this chapter consist of platforms or brackets and accompanying handholds mounted on, or attached to, an endless belt operating in one direction only and being supported by, and driven through, pulleys at the top and bottom. [Eff. 7/12/82; comp 12/6/90] (Auth: HRS §397-4) (Imp: HRS §397-4)

§12-231-2 Definitions. As used in this chapter:

"Belt breaking strength" means the amount (pounds or Newtons) of tensile load applied to a belt causing its fracture.

"Debris deflector" means a protective shield positioned to deflect falling objects away from the bottom pulley.

"Department" means the department of labor and industrial relations.

"Elevator bolt" means a flat head countersunk elevator bolt as defined by ANSI B18.5-1978, Table 9.

"Factor of safety" means the ratio of the tensile strength of the material to the allowable stress when a part is subjected to full load operation.

"Handhold (handgrip)" means a cup shaped device securely attached to the belt which can be grasped by the passenger to provide a means for maintaining balance.

"Limit switch" means a device the purpose of which is to cut off the power to the motor and apply the brake to stop the belt in the event that a loaded step passes the terminal landing.

"Manlift" means a device consisting of a power-driven endless belt moving in one direction only, and provided with steps or platforms and handholds attached to it for the transportation of personnel from floor to floor.

"RMA" means rubber manufacturers association.

"Rated speed" means the speed for which the device is designed and installed.

"Split-rail switch" means an electric limit switch operated mechanically by the rollers on the manlift steps. It consists of an additional hinged or "split" rail, mounted on the regular guide rail, over which the step rollers pass. It is springloaded in the "split" position. If the step supports no load, the rollers will "bump" over the switch; if a loaded step should pass over the section, the split rail will be forced straight, tripping the switch, and opening the electrical circuit.

"Step (platform)" means a passenger carrying unit.

"Travel" means the distance between the center of the top and bottom pulleys. [Eff. 7/12/82; am and comp 12/6/90] (Auth: HRS §397-3) (Imp: HRS §397-3)

§12-231-3 <u>General requirements</u>. (a) Floor openings. (See figure 231-1.)

(1) Allowable size. Floor openings for both the "up" and "down" runs shall be not less than 28 inches (711.2 mm) nor more than 36 inches (914.4 mm) in width for a 12-inch (304.8 mm) belt; not less than 34 inches (863.6 mm) nor more than 38 inches (65.2 mm) for a 14-inch (356.6 mm) belt; and not less than 36 inches (914.4 mm) nor more than 40 inches (1016 mm) for a 16-inch (406.4 mm) belt and shall extend not less than 24 inches (609.6 mm) nor more

than 28 inches (711.2 mm) from the face of the belt.

(2) Uniformity. All floor openings for a given manlift shall be uniform in size and shall be approximately circular, and each shall be located vertically above the opening below it.

(b) Riding clearance. There shall be no encroachment of any kind within the cylindrical space defined by the outer edges of the floor openings for the entire run of the manlift.

(1) Should maintenance or construction work be planned for in close proximity to the manlift that would or could cause an encroachment on the space defined in this subsection, the manlift shall be shut down during such work.

(c) Landings.

(1) Vertical clearance. The clearance between the floor or mounting platform and the lower edge for the conical guard above it required by subsection (d) below shall not be less than 7 feet 6 inches (2286 mm). Where this clearance cannot be obtained no access to the manlift shall be provided and the manlift runway shall be enclosed where it passes through such floor. The enclosure shall be equipped with an emergency exit.

(2) Clear landing space. The landing space adjacent to the floor openings shall be free from obstructions and kept clear at all times. This landing space shall be at least 2 feet (609.6 mm) in width from the edge of the floor opening used for mounting and dismounting.

(3) Lighting of landings. Adequate lighting, not less than 5 footcandles (53.82 lux) shall be provided at each floor landing at all times when the lift is in operation.

(4) Landing surface. The landing surfaces at the entrances and exits to the manlift shall be constructed and maintained as to provide safe footing at all times.

(5) Emergency landings. Where there is a travel of 50 feet (15.25 m) or more between floor landings, one or more emergency landings shall be provided so that there will be a landing (either floor or emergency) for every 25 feet (7.6 m) or less of manlift travel.

(A) Emergency landings shall be accessible from both the "up" and "down" runs of the manlift and shall give access to the ladder required in subsection (i) below.

(B) Emergency landings shall be completely enclosed with a standard railing and toeboard.

(C) Platforms constructed to give access to bucket elevators or other equipment for the purpose of

inspection, lubrication, and repair may also serve as emergency landings under this paragraph. All such platforms will then be considered part of the emergency landing and shall be provided with standard railings and toeboards.

(d) Guards on underside of floor openings. (See figure 231-2.)

(1) Fixed type. On the up side of the manlift floor, openings shall be provided with a bevel guard or cone meeting the following requirements:

(A) Slope. The cone shall make an angle of not less than 45 degrees with the horizontal.

(B) Extent. The lower edge of this guard shall extend at least 42 inches (1066.8 mm) outward from any handhold on the belt. It shall not extend beyond the upper surface of the floor above.

(C) Material and construction. The cone shall be made of not less than No. 18 U.S. gauge sheet steel or material of equivalent strength or stiffness. The lower edge shall have a minimum diameter of 1/2 inch (12.7 mm) and the interior shall be smooth with no rivets, bolts, or screws protruding.

(2) Floating type. Where the fixed guards specified in paragraph (1)(A) above cannot be used, a floating type safety cone may be used, such floating cones to be mounted on hinges at least 6 inches (152.4 mm) below the underside of the floor and so constructed as to actuate a limit switch should a force of 2 pounds (8.9 N) be applied on the edge of the cone closest to the hinge. The depth of this floating cone need not exceed 12 inches (304.8 mm).

(e) Protection of entrances and exits. (See figures 231-3 and 4.)

(1) Guardrail requirement. The entrances and exits at all floor landings affording access to the manlift shall be guarded by a maze (staggered railing) or a handrail equipped with self-closing gates.

(2) Construction. The rails shall be standard guardrails with toeboards meeting the provision of the Safety Requirements for Floor and Wall Openings, Railings, and Toeboards, ANSI A12.1.

(3) Gates. Gates, if used, shall open outward and shall be self-closing. Corners of gates shall be rounded.

(4) Maze. Maze or staggered openings shall offer NO DIRECT PASSAGE between enclosure and outer floor space.

(5) Except where building layout prevents, entrances at all landings shall be in the same relative position.

(6) Manlifts shall not be available to the general public. If located in buildings to which the public has access, such manlift or manlifts shall be located in an enclosure protected by self-closing spring-locked doors. Keys to such doors shall be limited to authorized personnel.

(f) Guards for openings.

(1) Construction. The floor opening at each landing shall be guarded on sides not used for entrance or exit by a wall, a railing and toeboard, or by panels of wire mesh.

(2) Height and location. Such rails or guards shall be at least 42 inches (1066.8 mm) in height on the up-running side and 66 inches (1676.4 mm) in height on the down-running side. Rails or guards shall be located not more than 12 inches (304.8 mm) from the edge of the floor opening.

(g) Bottom arrangement. (See figures 231-5 and 6.)

(1) Bottom landing. At the bottom landing the clear area shall be not smaller than the area enclosed by the guardrails on the floors above, and any wall in front of the down-running side of the belt shall be not less than 48 inches (1219.2 mm) from the face of the belt. This space shall not be encroached upon by stairs or ladders.

(2) Location of bottom pulley. The bottom pulley shall be installed so that it is supported by the lowest floor served, or, where it is necessary to gain the required clearance, in a pit below the lowest floor served. Where no pit is used, dismounting steps on the down run are not required. Where a pit is used or dismounting steps are provided, two automatic stop devices shall be installed on the down run to stop the manlift in case the step is ridden past the dismounting level. One of these shall be a treadle switch on the floor and the second shall be of a type described in section 12-231-4(g)(2)(A).

(3) A mounting platform shall be provided in front or to one side of the up-run at the lowest landing, unless the floor level is such that the following requirement can be met. The floor or platform shall be at or above the point at which the upper surface of the ascending step completes its turn and assumes a horizontal position.

(4) Guardrails. To guard against persons walking under a descending step, the area on the down side of the manlift shall be guarded in accordance with subsection (e) above. To guard against a person getting between the mounting

platform and an up step, the area between the belt and the platform shall be protected by a guardrail.

(h) Top arrangement. (See figure 231-7.)

(1) Clearance from floor. A top clearance shall be provided of at least 11 feet (3352.8 mm) above the top landing. This clearance shall be maintained from a plane through each face of the belt to a vertical cylindrical plane having a diameter 2 feet (609.6 mm) greater than the diameter of the floor opening, extending upward from the top floor of the ceiling on the up-running side of the belt. No encroachment of structural or machine supporting members within this space shall be permitted.

(2) Pulley clearance.

(A) There shall be a clearance of at least 5 feet (1524 mm) between the center of the top pulley shaft and any ceiling obstruction.

(B) The center of the top pulley shaft shall be not less than 6 feet (1828.8 mm) above the top landing.

(3) Emergency grab rail. An emergency grab bar or rail and platform shall be provided at the top when the distance to the top pulley is over 6 feet (1828.8 mm) above the top landing, otherwise only a grab bar or rail is to be provided to permit the rider to swing free should the emergency stops become inoperative.

(i) Emergency exit ladder. A fixed metal ladder accessible from both the "up" and "down" run of the manlift shall be provided for the entire travel of the manlift. Such ladder may be built into the supporting structure of the manlift and shall be in accordance with provision of ANSI A14.3, Safety Requirements for Fixed Ladders, except that no safety cage shall be provided. Note: The purpose of this rule is to provide a means of exit from a manlift step to the floor or platform below should a mechanical or power failure strand passengers between floors. No ladder passage through a floor or platform is required.

(j) Superstructure bracing. Manlift rails shall be secured in such a manner as to avoid spreading, vibration, and misalignment.

(k) Illumination.

(1) General. Both runs of the manlift shall be illuminated at all times when the lift is in operation. An intensity of not less than one footcandle (10.764 lux) shall be maintained at all points. (However, see subsection (c)(3) above for illumination requirements at landings.)

(2) Control of illumination. Lighting of manlift runways shall be by means of circuits permanently tied into the building circuits (no switches), or shall be controlled by

switches at each landing. Where separate switches are provided at each landing, any switch shall turn on all lights necessary to illuminate the entire runway.

(l) Weather protection. The entire manlift and its driving mechanism shall be protected from the weather at all times. [Eff. 7/12/82; am and ren §12-231-3 and comp 12/6/90] (Auth: HRS §397-4) (Imp: HRS §397-4)

§12-231-4 <u>Mechanical requirements</u>. (a) Machines.

(1) Types. Machines shall be of the direct-connected type or shall be driven by multiple V-belts. Cast-iron gears shall not be used. There shall be no 90 degree shoulders machined onto any shaft in manlift machines or pulleys.

(2) A mechanically-applied, electrically-released, brake shall be applied to the motor shaft for direct-connected units or to the input shaft for belt-driven units. The brake shall be capable of stopping and holding the manlift when the down side is loaded with 250 pounds (110 kg) on each step.

(b) Belt. (See table 231-1.)

(1) Material. The belt shall be laminated solid woven material or other material meeting the strength requirements of paragraph (3) below and having a coefficient of friction such that when used in conjunction with an adequate tension device it will meet the brake test specified in subsection (a)(2) above.

(2) Width. Belts shall meet RMA tolerances for width. The minimum shall be as follows:

(A) New installations. The width of the belt shall not be less than 14 inches (355.6 mm) for a travel not exceeding 150 feet (45.72 m) and 16 inches (406.4 mm) for a travel exceeding 150 feet (45.72 m) for complete new manlifts.

(B) Existing installations. The width of the belt may be less than those dimensions in subparagraph (A) above but never less than 12 inches (304.8 mm) nor less than that of the original belt. If a belt of at least 12 inches (304.8 mm) in width is to be used for a travel which exceeds 100 feet (30.48 m) the total tensile strength of the belt (its tensile strength rating per inch of width multiplied by its width) must meet the total tensile strength of the belt called for by the strength requirements and safety factor specifications of paragraph (3) below.

(3) The breaking strength of the manlift belt shall be not

less than 30,600 pounds (136, 116 N) minimum tensile strength for belts with 100 feet (30.48 m) of travel or less, 44,100 pounds (196, 178 N) minimum tensile strength for belts with 101 to 150 feet (30.78 to 45.72 m) of travel, and 72,000 pounds (320, 272 N) minimum tensile strength for belts with 151 to 250 feet (46.02 to 76.20 m) of travel. No manlift shall have a travel in excess of 250 feet (76.20 m). (See table 231-2 for breakdown by belt width.)

(4) Belt fastenings. Belts shall be fastened by a butt joint with a strap on the side away from the pulleys or a lap joint with the leading edge of the belt away from the pulley. (See figures 231-8 and 9 for correct methods.)

(A) For lap splices, the overlap of the belt at the joint shall be not less than 3 feet (914.4 mm), where the travel of the manlift does not exceed 100 feet (30.48 m), and not less than 4 feet (1219.2 mm), if the travel exceeds 100 feet (30.48 m).

(B) Where a butt joint is used, the strap shall extend not less than 3 feet (914.4 mm) on each side of the butt for a travel not in excess of 100 feet (30.48 m). For 12-inch (304.8 mm) wide belts, the joint shall be fastened with not less than 46 elevator bolts, each a minimum diameter of 1/4 inch (6.35 mm). These bolts shall be arranged so as to cover the area of the joint effectively.

(C) For a lap joint the minimum number of bolts for a belt width of 14 inches (355.6 mm) shall be not less than 23 and for a belt width of 16 inches (406.4 mm), the number of bolts shall be not less than 27.

(D) For a butt joint the bolts used shall be double the number used in a lap joint.

(5) Repairs prohibited. A belt that has become torn while in use on a manlift shall not be repaired and put back in service.

(6) Steps or handholds are prohibited at the belt joint.

(7) Flush bolt heads. All bolts used for joining the belt or securing handholds or steps to the belt shall be installed and maintained so that the heads do not project beyond the inner surface of the belt.

(8) Only one joint per manlift belt shall be permitted.

(9) Manlift belts shall be centered in the floor openings.

(c) Pulleys.

(1) Dimensions. Top pulleys and bottom pulleys shall have a diameter not less than 20 inches (508 mm).

(2) Pulley lagging. All head pulleys shall be lagged (i.e., covered with non-slip material securely fastened in place). The bolt heads shall be below the surface of the lagging. Head pulley lagging shall be changed in conjunction with belt replacement.

(3) Pulley protection. The machine shall be so designed and constructed as to catch and hold the driving pulley in event of shaft failure.

(4) Bottom pulley protection. The bottom pulley shall be provided with a debris deflector.

(d) Speed.

(1) Maximum speed. No manlift designed for a speed in excess of 80 feet per minute (0.4064 m/s) shall be installed except upon special permission of the department.

(2) All manlifts in a given location shall run at approximately the same speed.

Note: To take care of variations in voltage, etc., the actual free running speed of the belt (no load) may exceed rated speed by not more than 10 per cent.

(e) Platforms or steps.

(1) Minimum depth. Steps or platforms shall be not less than 12 inches (304.8 mm) nor more than 14 inches (355.6 mm) deep, measured from the belt to the edge of the step or platform.

(2) The width of the step or platform shall be not less than the width of the belt to which it is attached.

(3) The distance between steps shall be equally spaced and not less than 16 feet (4876.8 mm) measured from the upper surface of one step to the upper surface of the next step above it.

(4) Angle of step. The surface of the step shall make approximately a right angle with the "up" and "down" run of the belt, and shall travel in the approximate horizontal position with the "up" and "down" run of the belt.

(5) The surface of each step shall be protected with a nonslip tread.

(6) Strength of step supports. When subjected to a load of 400 pounds (equal to mass of 181 kg) applied at the approximate center of the step, step frames, or supports and their guides shall be of adequate strength to prevent the disengagement of any step roller, prevent any appreciable misalignment and prevent any visible deformation of the step or its support.

(7) Steps shall be attached using elevator bolts with locking nuts.

(8) Prohibition of steps without handholds. No step shall be provided unless there is a corresponding handhold above and below it meeting the requirements of subsection (f) below. If a step is removed for repairs, or permanently, the handholds immediately above and below it shall be removed before the lift is again placed in service.

(f) Handholds. (See figure 231-10.)

(1) Location. Handholds attached to the belt shall be provided and so installed that they are not less than 4

feet (1219.2 mm) nor more than 4 feet 8 inches (1422.4 mm) above the step tread and centered on the belt. These shall be so located as to be available on both "up" and "down" run of the belt.

(2) Size. The grab surface of the handhold shall be not less than 4-1/2 inches (114.3 mm) in width, not less than 3 inches (76.2 mm) in depth, and provide 2 inches (50.8 mm) of clearance from the belt. Fastenings for handholds shall be located at least one inch (25.4 mm) from the edge of the belt.

(3) Strength. The handhold shall be capable of withstanding, without damage, a load of 300 pounds (equal to mass of 136 kg) applied parallel to the run of the belt and attached to the belt with elevator bolts.

(4) Prohibition of handhold without steps. No handhold shall be provided without a corresponding step. If a handhold is removed permanently or temporarily, the corresponding step and handhold for the opposite direction of travel shall also be removed before the lift is again placed in service.

(5) Type. All handholds shall be of the closed type.

(g) Electrical requirements.

(1) All electrical installations shall be in compliance with the National Electrical Code ANSI/ASME NFPA 70.

(2) Up limit stops.

(A) Requirements. Two separate automatic stop devices shall be provided to cut off the power and apply the brake when a loaded step passes the top landing. One of these shall consist of a split-rail switch, or equivalent, mechanically operated by the step roller and located not more than 6 inches (152.4 mm) above the top landing. The second automatic stop device may consist of any of the following: A split-rail switch placed above and not more than 9 inches (228.6 mm) on the side opposite the first limit switch; an electronic device; or a switch actuated by a lever, rod, or plate, to be placed at the top pulley on the up side and at approximately a 45-degree angle with horizontal to just clear a passing step.

(B) Manual reset location. After the manlift has been stopped by an automatic stop device it shall be necessary to reset the electrical control circuit manually. The device shall be so located that a

person resetting it shall have a clear view of both the "up" and "down" runs of the manlift. It shall not be possible to reset the device from any step. Manual resets are permissible at top and bottom landings only.

(C) Cut-off point. The initial limit stop device shall function so that the manlift will be stopped before the loaded step has reached a point 24 inches (609.6 mm) above the top landing.

(D) Where such switches open the main motor circuit directly they shall be of the multiple type.

(E) Where electronic devices are used they shall be so designed and installed that failure will result in shutting off the power to the driving motor.

(F) Where flammable vapors or dust may be present, all electrical installations shall be in accordance with National Electrical Code ANSI/NFPA 70 requirements for such locations.

(G) Unless of the oil-immersed type, controller contacts carrying the main motor current shall be copper to carbon or equal, except where the circuit is broken at two or more points simultaneously.

(3) Rope control stop.

(A) Requirements. A rope control stop means shall be provided

(B) Location. This control shall be within easy reach of the "up" and "down" runs of the belt, incorporating rope guides and pulley arrangements to restrict lateral movement.

(C) Operation. This control shall be so connected to a control lever or operating mechanism that it will cut off the power and apply the brake when pulled in the direction of travel. The control shall consist of rope with a diameter not less than 3/8 inch (9.525 mm). Wire rope shall not be used.

(4) Reverse phase relay protection is required on all manlifts.

(h) Factor of safety. All parts of the machine shall have a factor of safety of 6 based on a load of 200 pounds (equal to mass of 91 kg) on each horizontal step on the "up" and "down" runs.

Note: Any stresses set up during acceleration or stopping are presumed to be taken care of in the above factor of safety. This section does not apply to belts. See section 12-231-4(b)(3). [Eff. 7/12/82; am and ren §12-231-4 and comp 12/6/90] (Auth: HRS §397-4) (Imp: HRS §397-4)

§12-231-5 **Instruction and warning signs**. **(a)** Signs of conspicuous and easily read style, giving instructions for the use of the manlift, shall be posted at each landing or stenciled on the belt.

(1) Size and legibility. Such signs shall be of letters not less than one inch (25.4 mm) in height and of a color having high contrast with the surface on which it is stenciled or painted (white or yellow on black or black on white or gray.)

(2) Inscription. The instructions shall read approximately as follows:
face the belt; use the handhold; to stop - pull rope.

(b) Top floor warning sign and light.

(1) Requirements. At the top floor an illuminated sign shall be displayed bearing the following wording:

"TOP FLOOR--GET OFF"

Signs shall be in block letters not less than 2 inches (50.8 mm) in height. This sign shall be located within easy view of an ascending passenger and not more than 2 feet (609.6 mm) above the top landing.

(2) Additional warning light. In addition to the sign required by this subsection, a red warning light of not less than 40-watt rating shall be provided immediately below the top landing and so located as to shine in the passenger's face.

(c) Bottom floor warning sign. A sign within easy view of descending passengers shall be displayed bearing the following wording:

"BOTTOM FLOOR--GET OFF"

The signs shall be in block letters not less than 2 inches (50.8 mm) in height, and no more than 2 feet (609.6 mm) above the bottom landing.

(d) Visitor warning sign. A conspicuous sign having the following legend AUTHORIZED PERSONNEL ONLY--shall be displayed at each landing. Sign shall be of block letters not less than 2 inches (50.8 mm) in height and shall be of a color offering high contrast with the background color. [Eff. 7/12/82; am and ren §12-231-5 and comp 12/6/90] (Auth: HRS §397-4) (Imp: HRS §397-4)

§12-231-6 **Operating rules**. **(a)** Only authorized personnel, trained in their use, shall be permitted to use manlifts.

(b) Unsafe conditions on manlifts must be reported.

(c) When riding a manlift, the passenger shall stand squarely on step, face the belt, and grip handhold securely. Jumping on step, yanking on handhold, or horseplay of any kind is prohibited.

(d) No freight, packaged goods, pipe, lumber or materials of any kind shall be carried or transported on any manlift.

(e) No tools, except those which will fit entirely within a pocket in usual working clothes, shall be carried on any manlift.

(f) Before starting or re-starting a manlift it shall be necessary to alert all passengers on the manlift and all others in its vicinity. [Eff. 7/12/82; ren §12-231-6 and comp 12/6/90] (Auth: HRS §397-4) (Imp: HRS §397-4)

§12-231-7 **<u>Tests and Inspections</u>**. **(a)** Acceptance tests. The initial acceptance test shall be made by the installer or owner and witnessed by a qualified inspector from the department.

(1) Up capacity. The manlift with 200 pounds (equal to mass of 91 kg) on each horizontal step of the "up" run shall show no appreciable slip of the belt when standing or when running at rated speed.

(2) Down capacity - brake. The manlift with 200 pounds (equal to mass of 91 kg) on each horizontal step of the "down" run shall show no appreciable slip of the belt when standing or when running at rated speed. The brake shall stop and hold the belt with test load within a maximum of 24 inches (609.6 mm) of travel.

(3) Loaded step deflection. Each step shall be subject to a 400 pound (equal to mass of 181 kg) load applied to the center of the step with the machine stationary. The guides shall not be displaced and there shall be no visible deformation or misalignment of the step or its support during the test.

(4) Strength of handhold. Each handhold shall support a load of 300 pounds (equal to mass of 136 kg) without appreciable deformation or injury to its fastenings. Test to be made with machine stationary.

(5) Final limit stop. The "up" final limit stops shall be tested by placing a weight of 50 pounds (23 kg) on the approximate center of the step or platform and running the machine in the "up" direction until the manlift is stopped by the limit stop. Both devices shall be tested.

(6) Rope control stop. The machine shall be stopped on both the "up" and "down" run by means of the rope control stop.

(7) Movable cone guards. If such guards are installed each one shall be operated by applying a force of not more than

2 pounds (8.9 N) on the edge of guard nearest hinge.

(8) Speed. Speed shall be taken and checked against specified (rated) speed. It shall not exceed the rated speed by more than 10 per cent when running empty. Speed may be taken by a revolution counter on the top (head) pulley and the revolutions per minute multiplied by (3.1416) x D, where D is the diameter in feet or may be taken with a tachometer with 6-inch or 12-inch circumference wheel running in contact with the belt. Readings taken with a 6-inch wheel circumference should be divided by two. For speed values in meters per second (m/s) the following conversion factor may be useful:

$$\frac{1\ \text{ft}}{\text{min}} = \frac{0.00508\text{m}}{\text{s}}$$

(b) Periodic inspections by the department. Permit inspections of manlifts shall be made annually and an interim inspection shall be made at an interval of not less than 5 months nor more than 7 months from the date of the permit inspection.

(c) Safety inspections by the owner or user.

(1) Each manlift shall be inspected by a competent person designated by the owner or user at intervals of not more than 30 days. He shall have the authority and responsibility to discontinue use of a manlift found to be unsafe.

(2) This periodic inspection shall cover but is not limited to the following items:

Belts and belt joint
Bottom pulley and clearance
Bottom pulley takeup
Brake
Drive coupling
Driving mechanism
Electrical switches
Floor landings - slippery conditions
Guardrails
Handhold fastenings
Illumination
Limit switches
Lubrication
Motor
Motor coupling
Pulley lagging
Pulley supports

Rail supports and fastenings
Rail/track
Rollers and slides
Rope control stop
"Skip" on up or down run when mounting step (check drive train)
Steps
Step fastenings
Top pulley
Vibration and misalignment
Warning signs and lights

(3) Unsafe use. The individual making the inspection shall also make a special point to observe what persons are using the manlift and whether they are complying with the operating rules listed in section 12-231-6. He shall immediately report any unsafe acts or unauthorized use to the department.

(4) Inspection log. A written record shall be kept of findings at each inspection and be signed and dated. The owner shall certify in writing, and provide upon request to the authorized inspector from the department, inspection logs of each manlift. [Eff. 7/12/82; am and ren §12-231-7 and comp 12/6/90] (Auth: HRS §397-4) (Imp: HRS §397-4)

§12-231-8 **<u>Operating permit</u>**. **(a)** An annual operating permit shall be issued by the department upon completion of an inspection required by section 12-231-7 in which no unsafe conditions were found. A temporary operating permit shall be issued for a specific period when minor discrepancies are noted at the time of the inspection. Upon correction of the discrepancies by the owner or user, an annual operating permit shall be issued to expire one year from the date of the inspection for which the temporary operating permit was issued.

(b) The operating permit shall be posted in a conspicuous location at the manlift installation. [Eff. 7/12/82; am and ren §12-231-8 and comp 12/6/90] (Auth: HRS §397-4) (Imp: HRS §397-4)

§12-231-9 **<u>Sources of codes</u>**. **(a)** The following referenced codes are available from The American Society of Mechanical Engineers, United Engineering Center, 345 East 47th St., New York, N.Y. 10017 or from the American National Standards Institute, Inc., 1430 Broadway, New York, N.Y. 10018:

ANSI A12.1-1973 Safety Requirement for Floor and Wall Openings, Railings, and Toeboards

ANSI A14.3-1974	Safety Requirements for Fixed Ladders
ANSI B15.1-1972	Safety Standard for Mechanical Power Transmission Apparatus
ANSI B18.5-1978	Round Head Bolts

(b) The following referenced code is available from National Fire Protection Association, 470 Atlantic Avenue, Boston, Massachusetts 02210:

ANSI/NFPA 70-1981 National Electrical Code. [Eff. 7/12/82; ren §12-231-9 and comp 12/6/90] (Auth: HRS §397-4) (Imp: HRS §397-4)

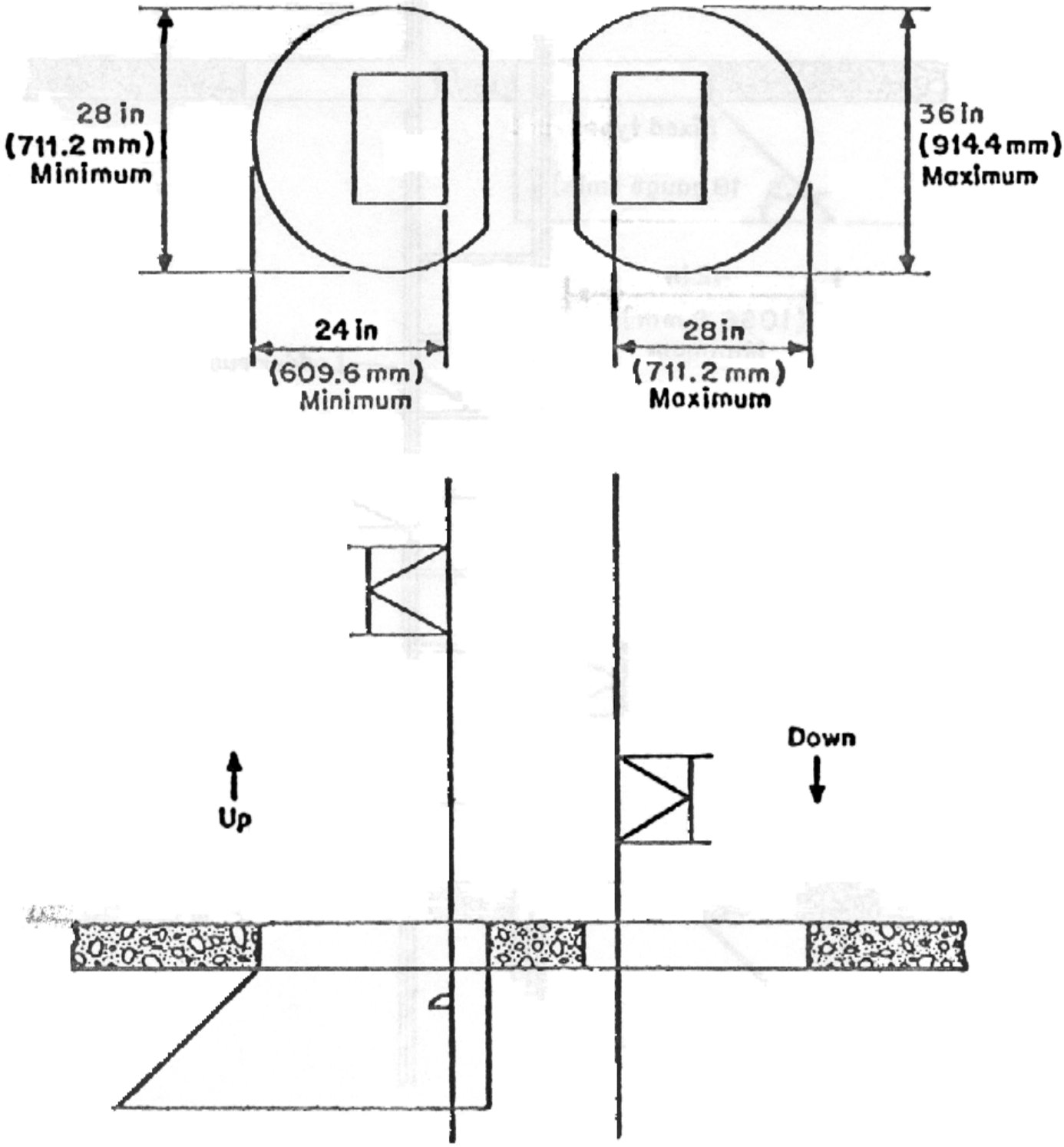

Figure 231-1

Typical Floor Openings (For 12 inch (304.8 mm) Belt)

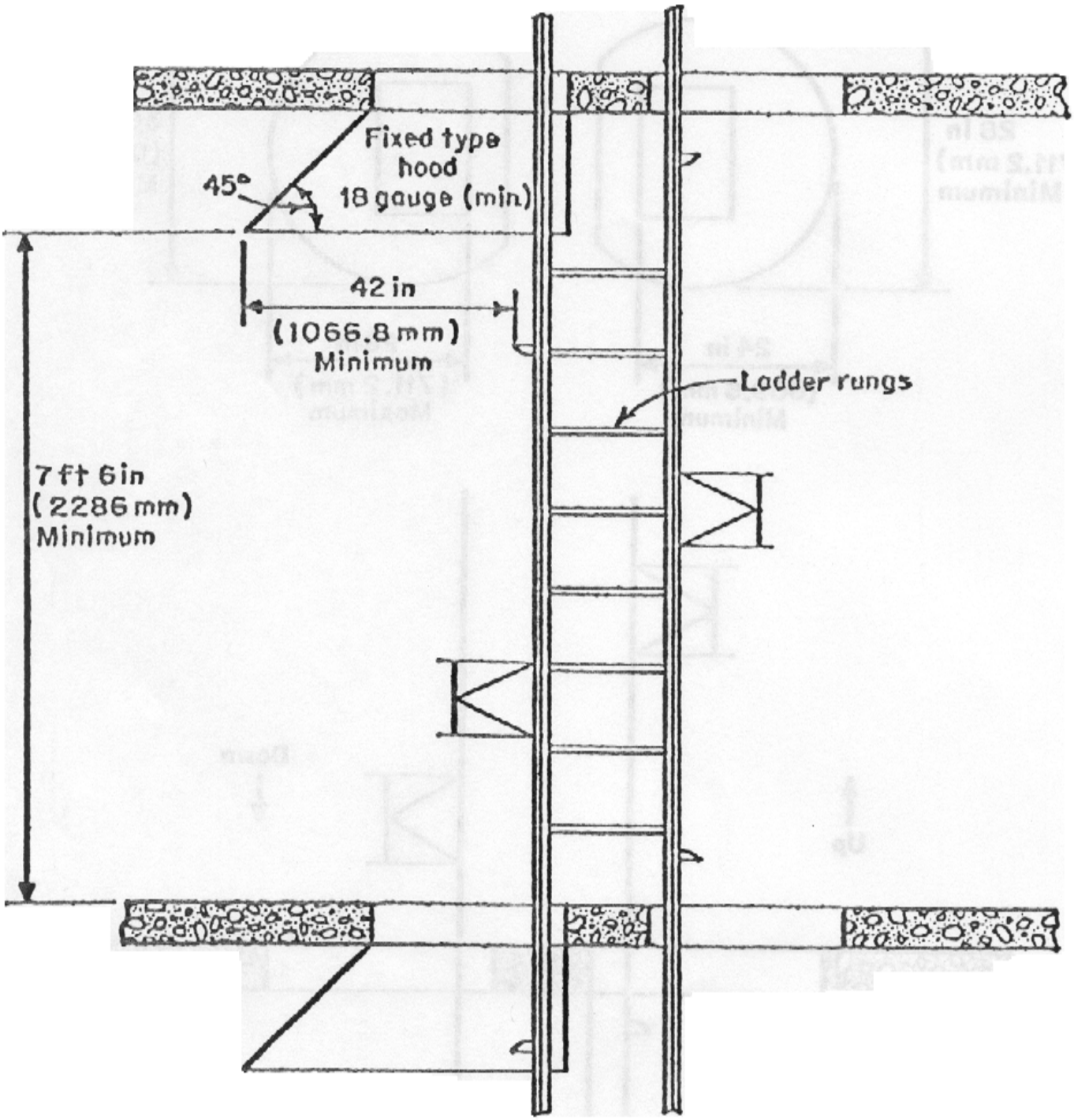

gure 231

Fixed Type Guards Floor Openings

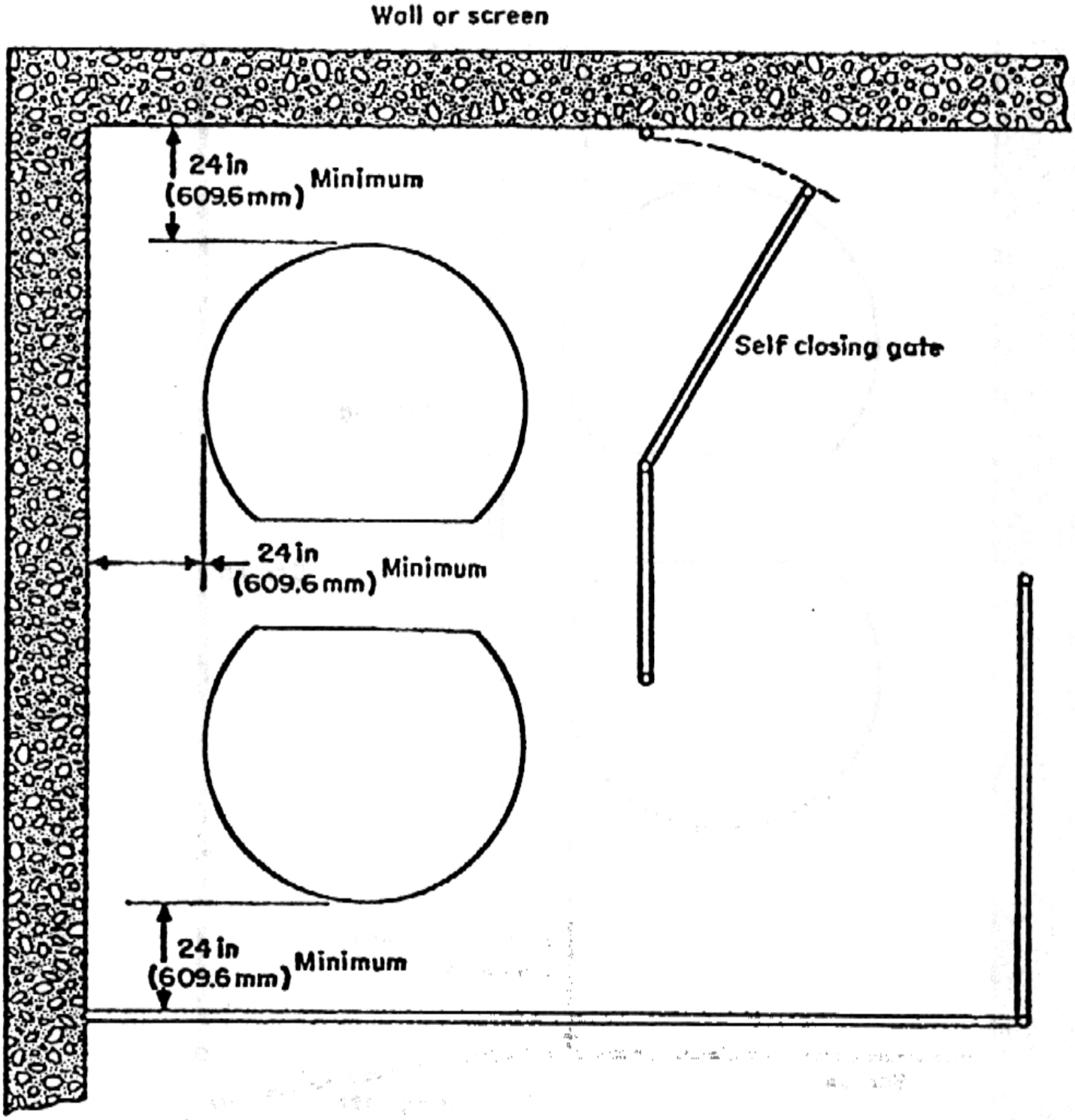

Figure 231-3

Guard Railing

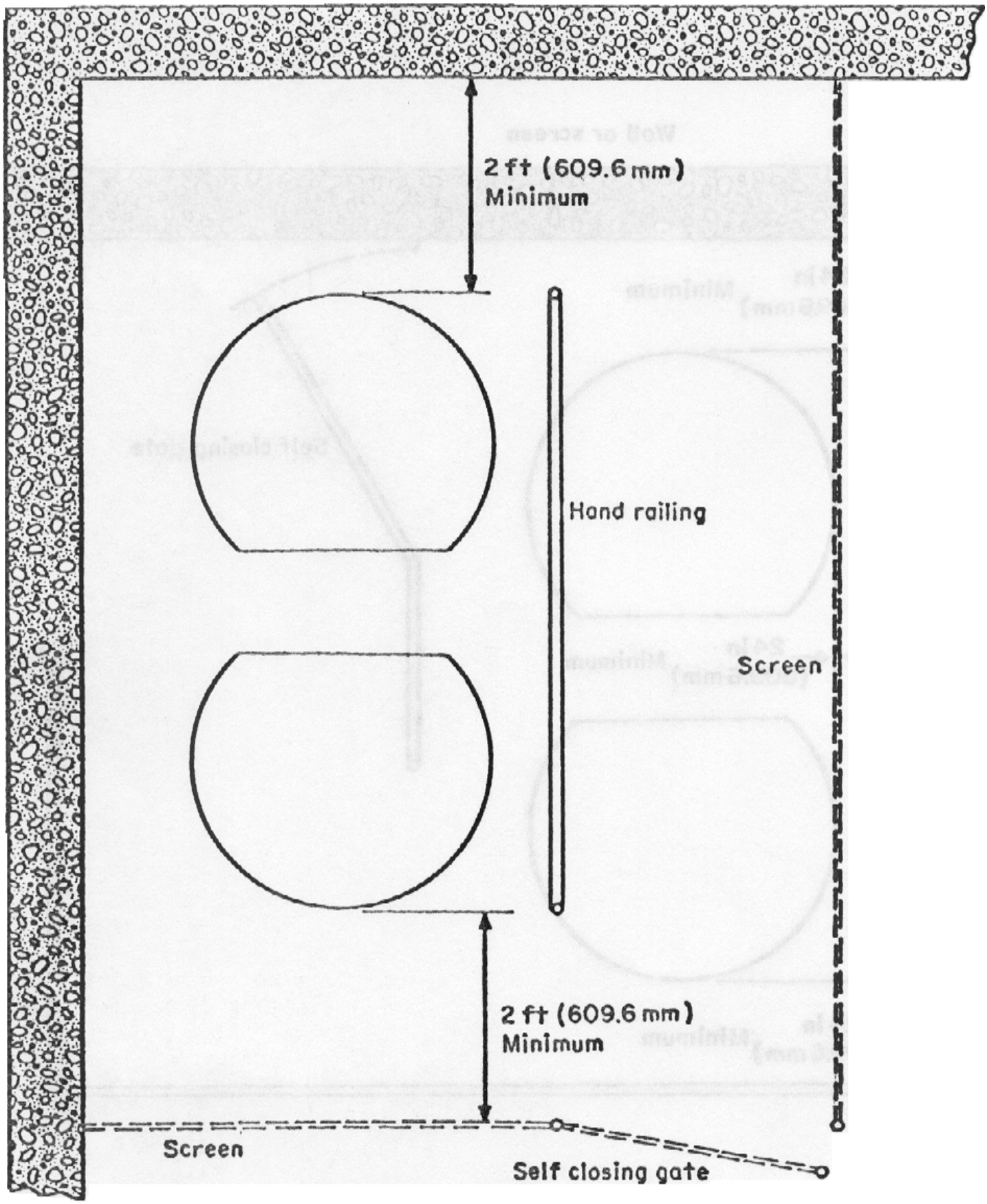

Figure 231-4

Screen Enclosure

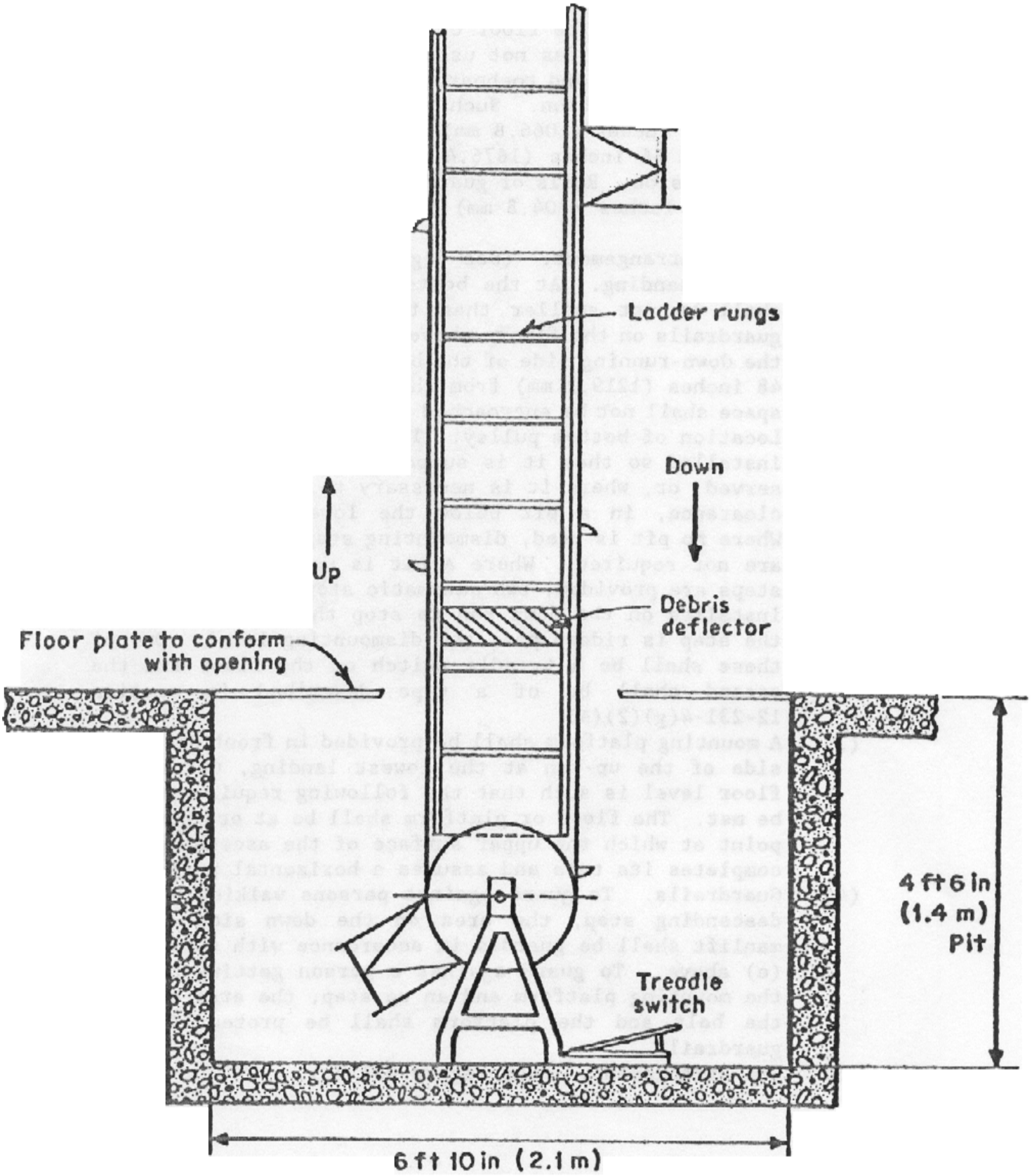

Figure 231-5

Typical Pit Location Detail

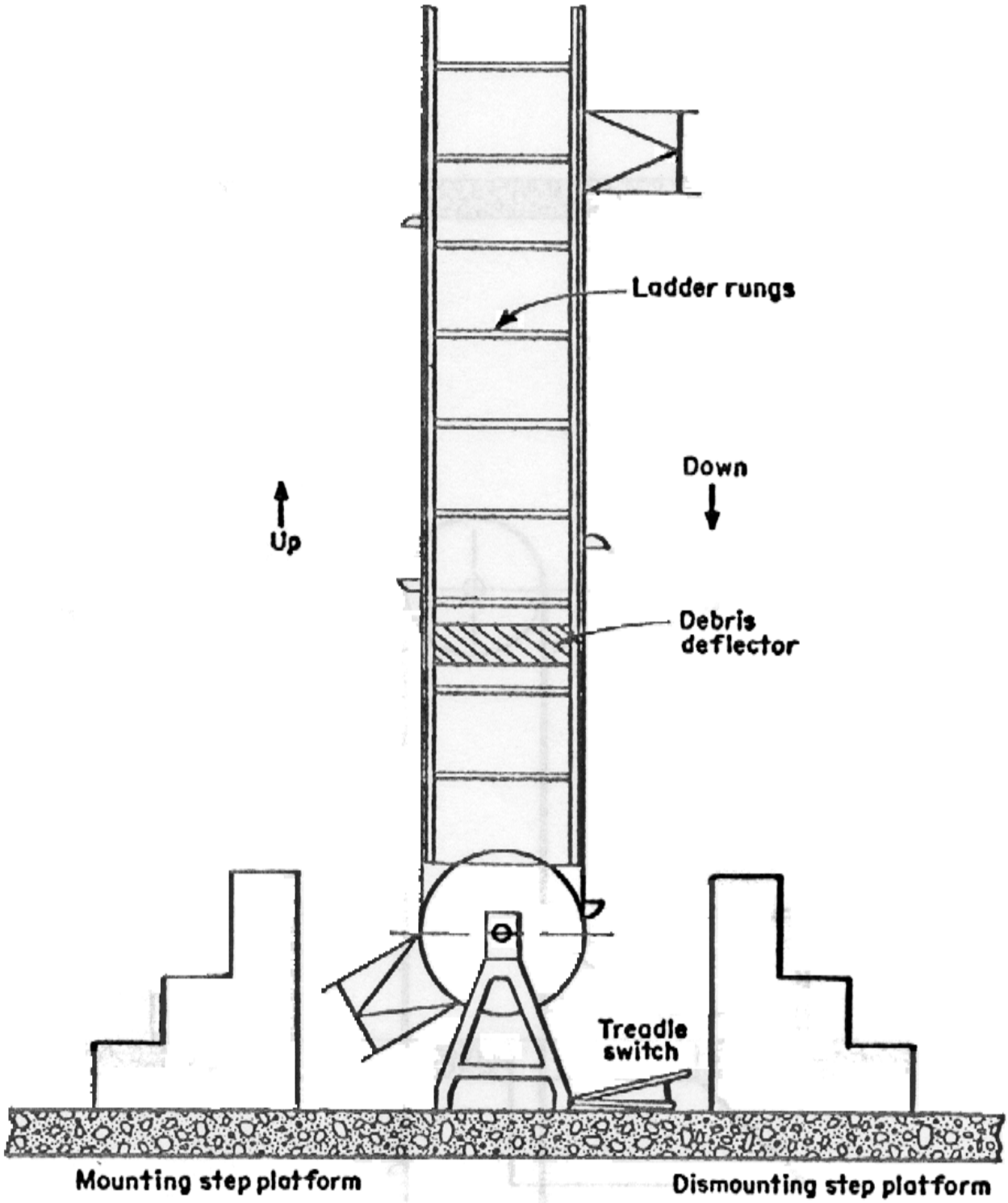

Note: Where no pit is used, neither the treadle switch nor dismounting steps are required.

Figure 231-6

Typical Lower Landing Detail

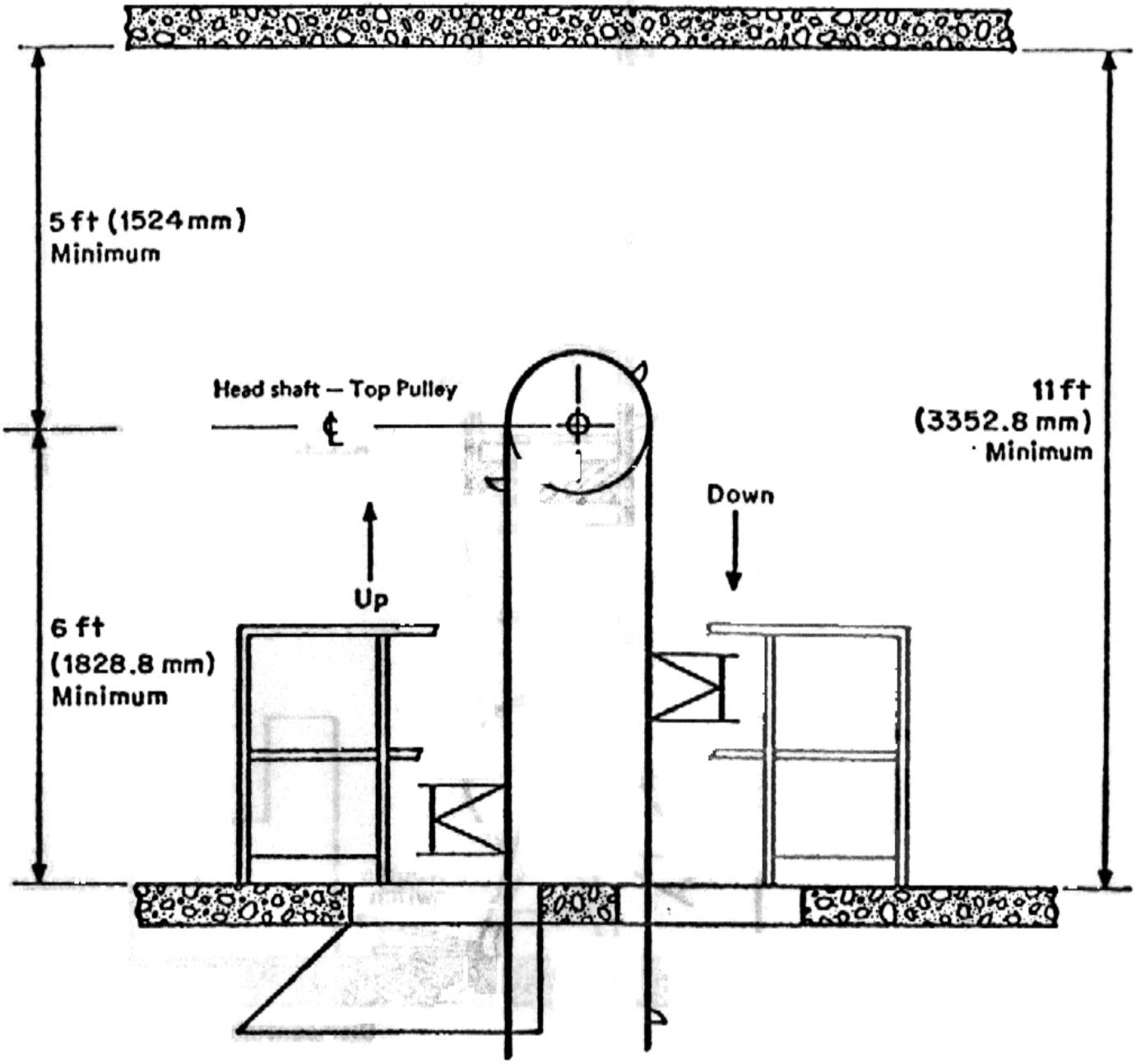

Figure 231-7

Head Shaft Dimensions - Top Landing

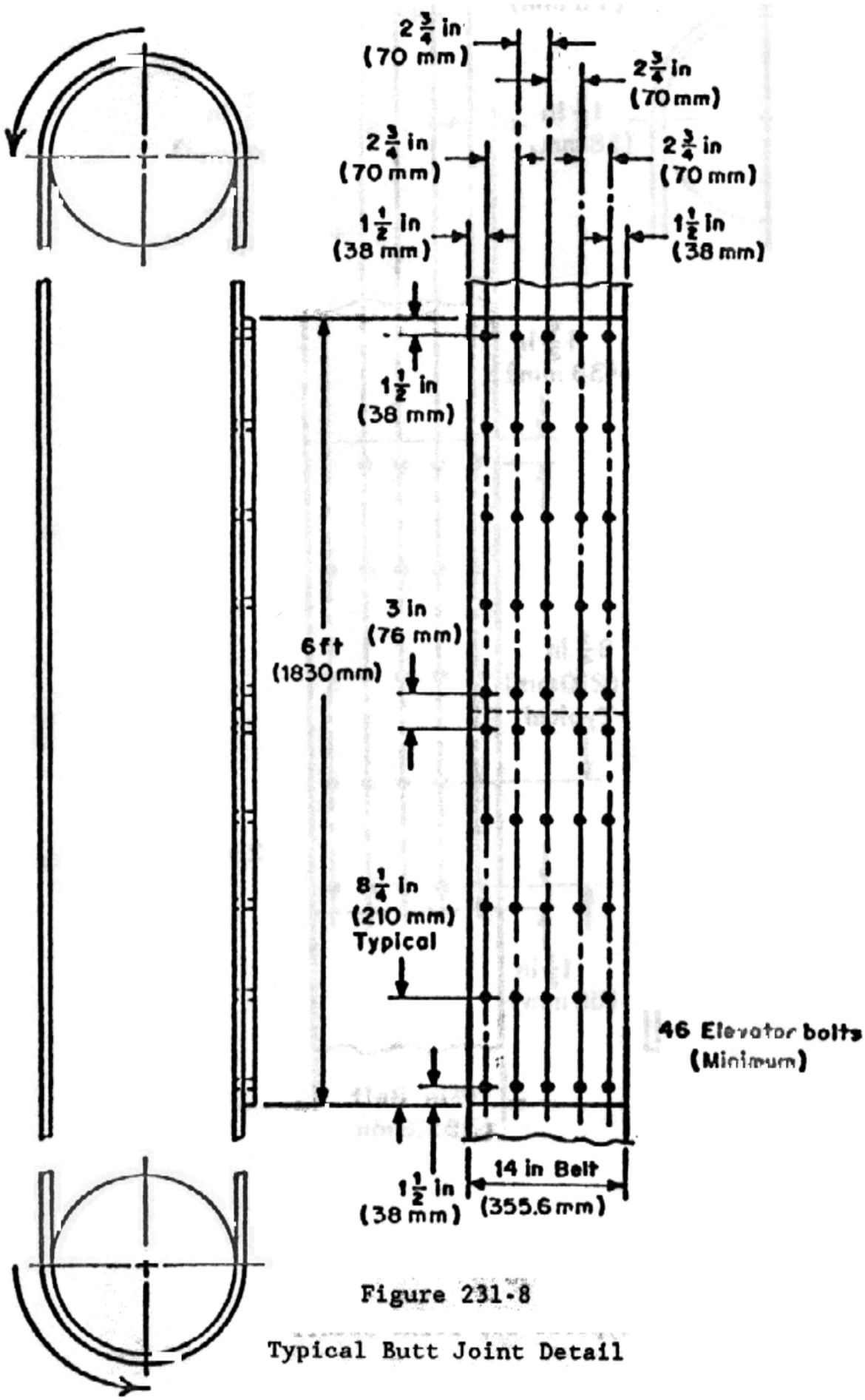

Figure 231-8

Typical Butt Joint Detail

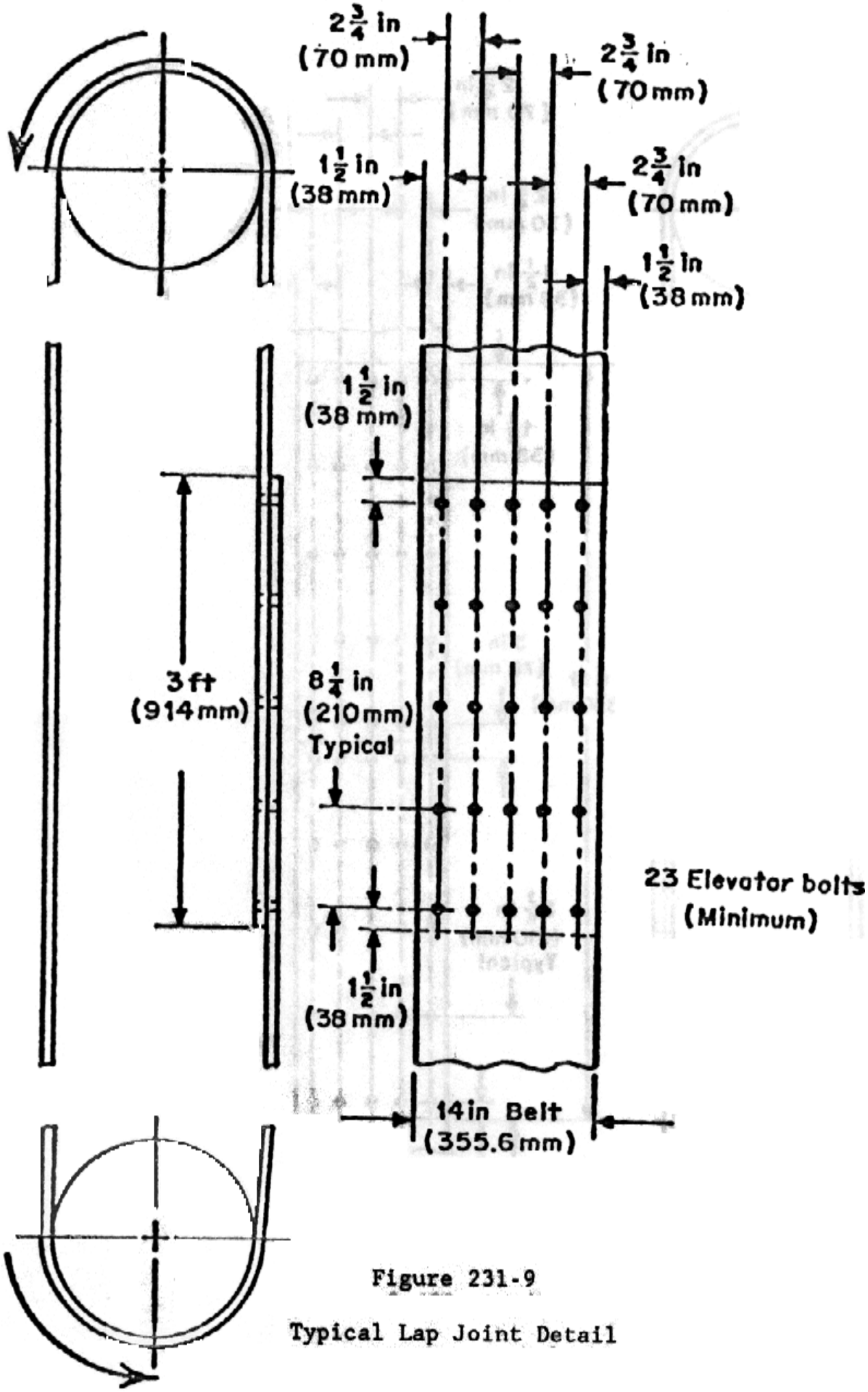

Figure 231-9

Typical Lap Joint Detail

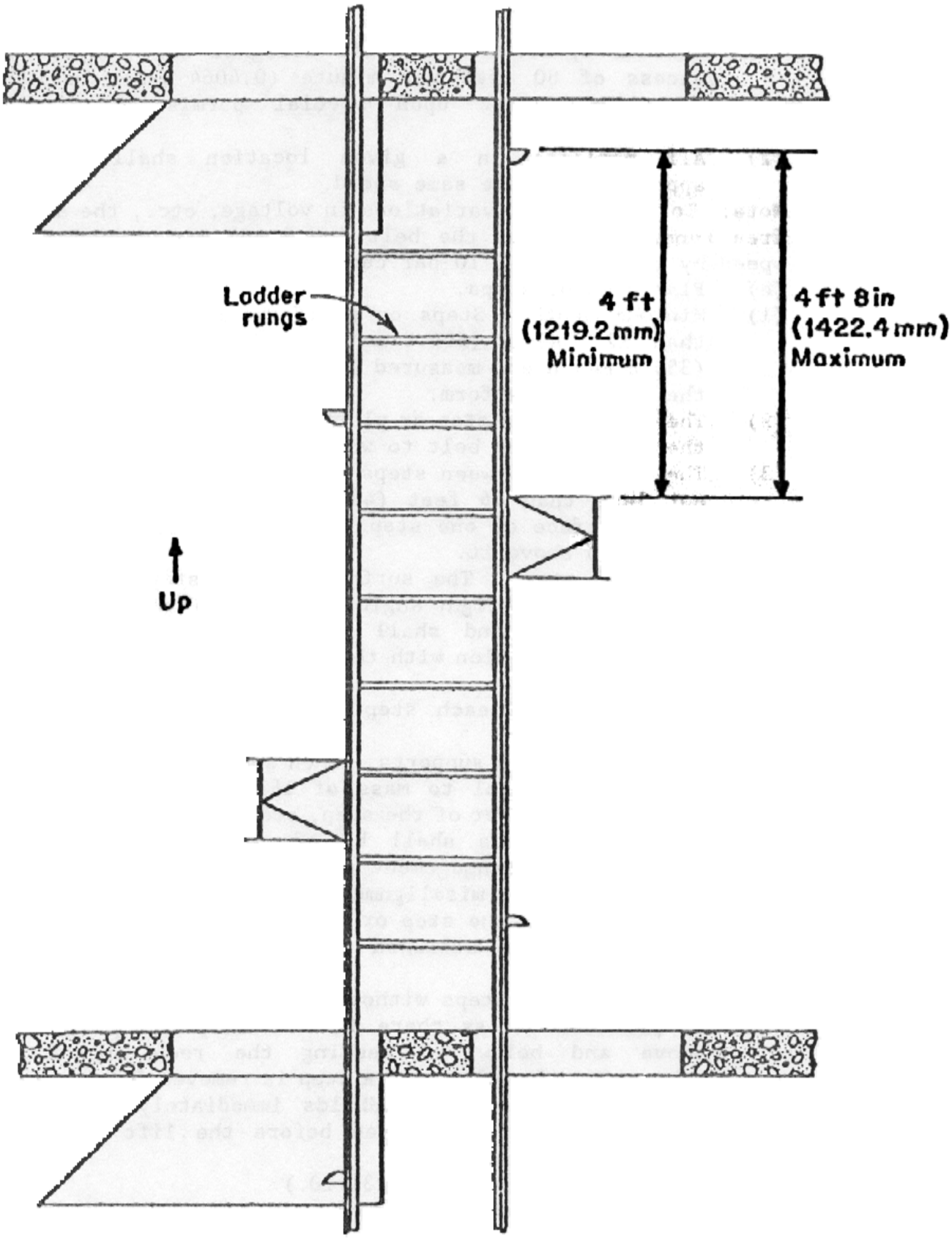

Figure 231-10

Distance Between Handhole and Step

TABLE 231-1

RMA TOLERANCES FOR WIDTH OF MOLDED EDGE BELTING

STANDARD BELT WIDTHS		WIDTH TOLERANCE PLUS OR MINUS			MAXIMUM WIDTH VARIATION IN ANY ONE BELT		
inches	mm	inches		mm	inches		mm
		FRACTION	DECIMAL		FRACTION	DECIMAL	
12	304.8	1/4	0.250	6.35	1/4	0.250	6.35
14	355.6	1/4	0.250	6.35	1/4	0.250	6.35
16	406.4	1/4	0.250	6.35	1/4	0.250	6.35

Note: Slit Edge Belting

The width tolerance of slit edge belting shall be 50% of that shown for molded edge belting. The maximum width variation within any one belt shall be the same as that shown above for molded edge belting.

TABLE 231-2

BELT BREAKING STRENGTH

BELT TRAVEL PULLEY CENTERS		BELT WIDTH		MINIMUM BELT BREAKING STRENGTH		MINIMUM BELT BREAKING STRENGTH	
feet	m	inches	mm	POUNDS PER INCH OF BELT WIDTH	N PER mm OF BELT WIDTH	POUNDS PER FULL BELT WIDTH	N PER FULL BELT WIDTH
0-100	0-30	12	304.8	2,550	446.6	30,600	136,100
		14	355.6	2,250	394.0	31,500	136,100
		16	406.4	2,000	350.2	32,000	142,300
100-150	30-46	12	304.8	3,675	643.6	44,100	196,200
		14	355.6	3,200	560.4	44,800	199,300
		16	406.4	2,850	499.1	45,600	202,800
150-250	46-76	12	304.8	6,000	1,050.8	72,000	320,300
		14	355.6	5,225	915.0	73,150	325,400
		16	406.4	4,625	810.0	74,000	329,200